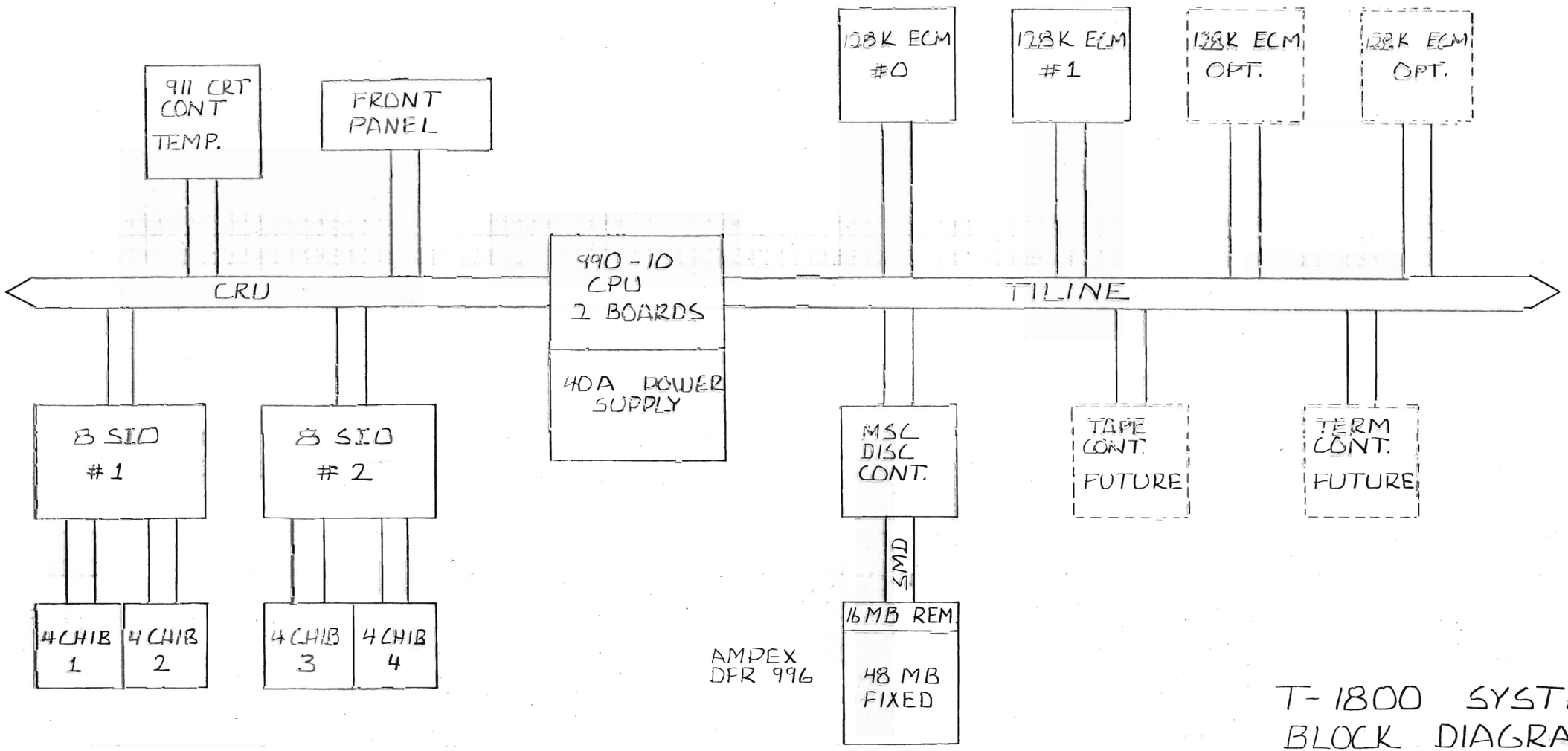

T-1800 SYSTEM BLOCK DIAGRAM

DRAWN mtm 1/13/81	SIZE B	FSCM NO.	DWG. NO.	REV.
ISSUED	SCALE		SHEET 1 OF 1	

BISHOP GRAPHICS/ACCUPRESS RECORDER NO. A-7527

NOTES

(1) JUMPER TABLE FOR J1 - BOARD SELECT

JUMPER	CRU ADDR	POSITION
1 TO 8	1000	0
2 TO 7	1100	1
3 TO 6	1200	2
4 TO 5	1300	3

(2) JUMPER INSTRUCTIONS FOR J2 - INTERUPT SELECT.
JUMPER IS LABELED 0-7 CORRESPONDING TO PORTS 0-7
ALSO LABELED A, B, C. CONNECTING A to B ON ANY PORTS
SELECTS THE LEFT INTERUPT FOR THAT PORT (INT 3 FOR SLOT 11)
CONNECTING B-C SELECTS THE RIGHT INTERUPT (INT 7 FOR SLOT 11)

	INTERUPT	
SLOT	JUMPER A-B	JUMPER B-C
8	9	9
9	8	10
10	12	11
11	3	7
12	14	4
13	15	6

(3) JUMPER INSTRUCTIONS FOR J19 - TRANSFORMER BAUD RATE SELECT

JUMPER	TRANS BAUD RATE
1 TO 2	9600
1 TO 3	19.2KB
1 TO 4	38 KB

DETERMINES TRANSFORMER INTERFACE BAUD RATE FOR 4 CH1B BOARD.

(4) JUMPER INSTRUCTIONS FOR J3-J10 - BAUD RATE SELECT

JUMPER	BAUD RATE	JUMPER	BAUD RATE
1 TO 16	300	5 TO 12	9600
2 TO 15	1200	6 TO 11	19 KB
3 TO 14	2400	7 TO 10	38 KB
4 TO 13	4800	8 TO 9	76 KB

(5) JUMPER INSTRUCTIONS FOR J11 - J18 - CRT/PRINTER SELECT

JUMPER	TERMINAL
1 TO 2	CRT, FLO
2 TO 3	PRINTER

REVISIONS

LTR	DESCRIPTION	DATE	APPROVED
711	PRODUCTION RELEASE	12/12/80	MTM

1800	1010287
USED ON	NEXT ASSY

TOLERANCES UNLESS OTHERWISE SPECIFIED
FRACTIONS ± DEC ± ANGLES ±

APPROVALS	DATE
DRAWN MTM	11/2/80
CHECKED	

TRIAD Systems Corporation

8 SIO
SCHEMATICS

SCALE | SIZE B | DRAWING NO. L1011054

DO NOT SCALE DRAWING | SHEET 1 OF 12

BISHOP GRAPHICS/ACCUPRESS
REORDER NO. A-8683

REVISIONS			
LTR	DESCRIPTION	DATE	APPROVED

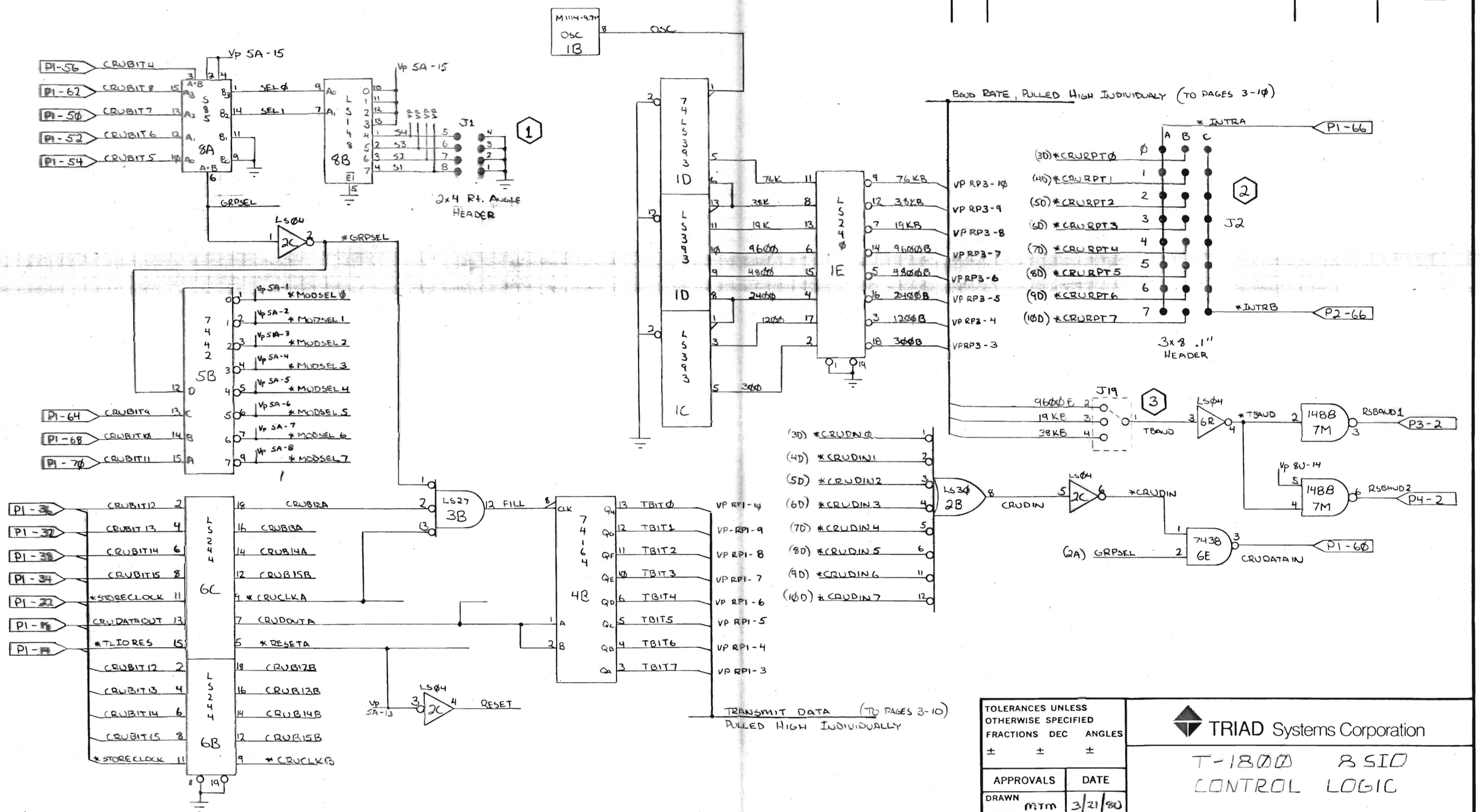

TOLERANCES UNLESS OTHERWISE SPECIFIED		
FRACTIONS ±	DEC ±	ANGLES ±

APPROVALS	DATE
DRAWN MTM	3/21/80
CHECKED MTM	4/10/80

TRIAD Systems Corporation

T-1800 8SIO
CONTROL LOGIC

SCALE	SIZE	DRAWING NO.
	B	L1011054

DO NOT SCALE DRAWING

SHEET 2 OF 12

BISHOP GRAPHICS/ACCUPRESS
REORDER NO. A-8583

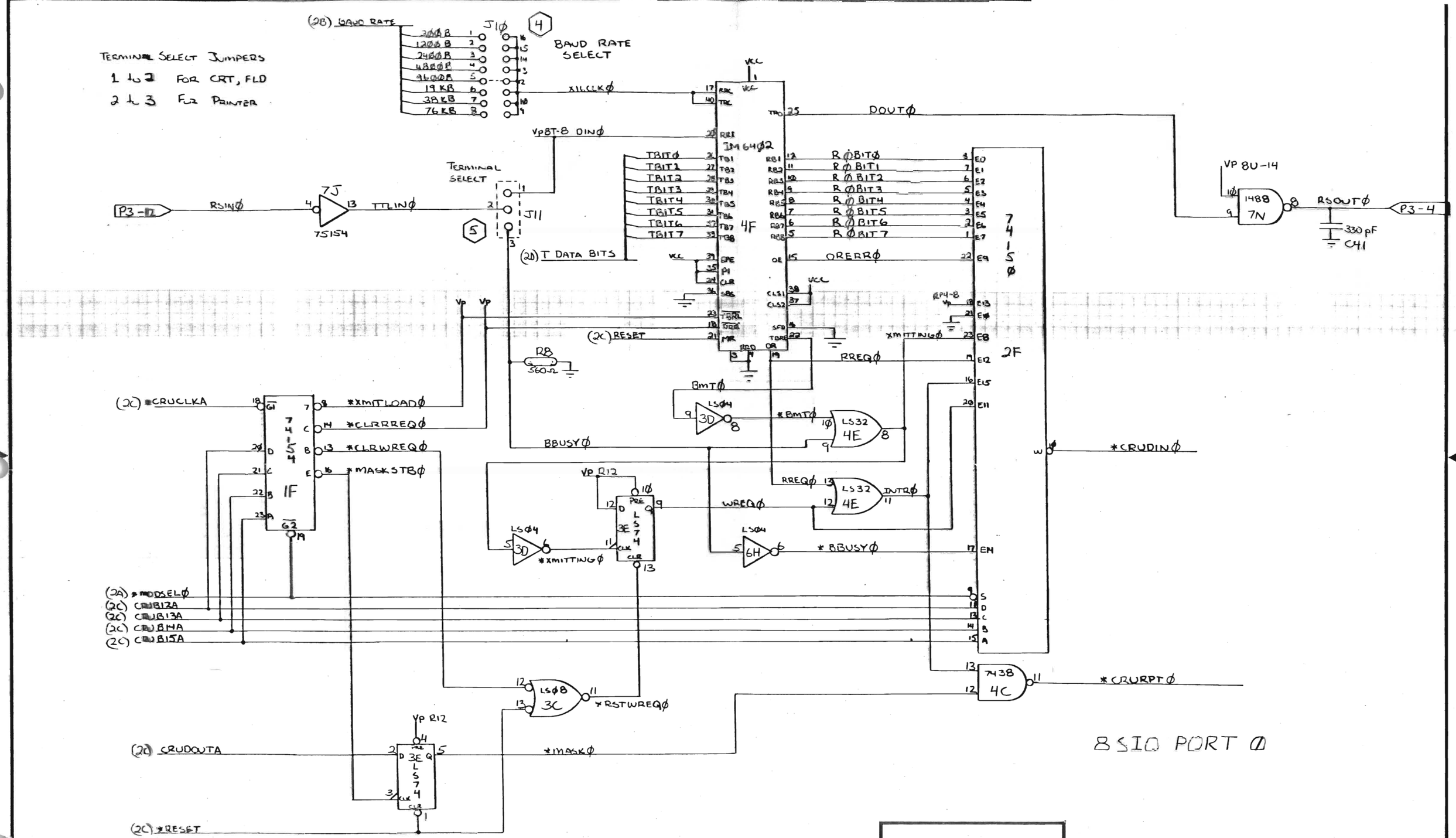

DRAWN MTM 11/2/80	SIZE B	FSCM NO.	DWG. NO. L1011054	REV.
ISSUED	SCALE		SHEET 3 OF 12	

BISHOP GRAPHICS/ACCURESS
REORDER NO. A-7527

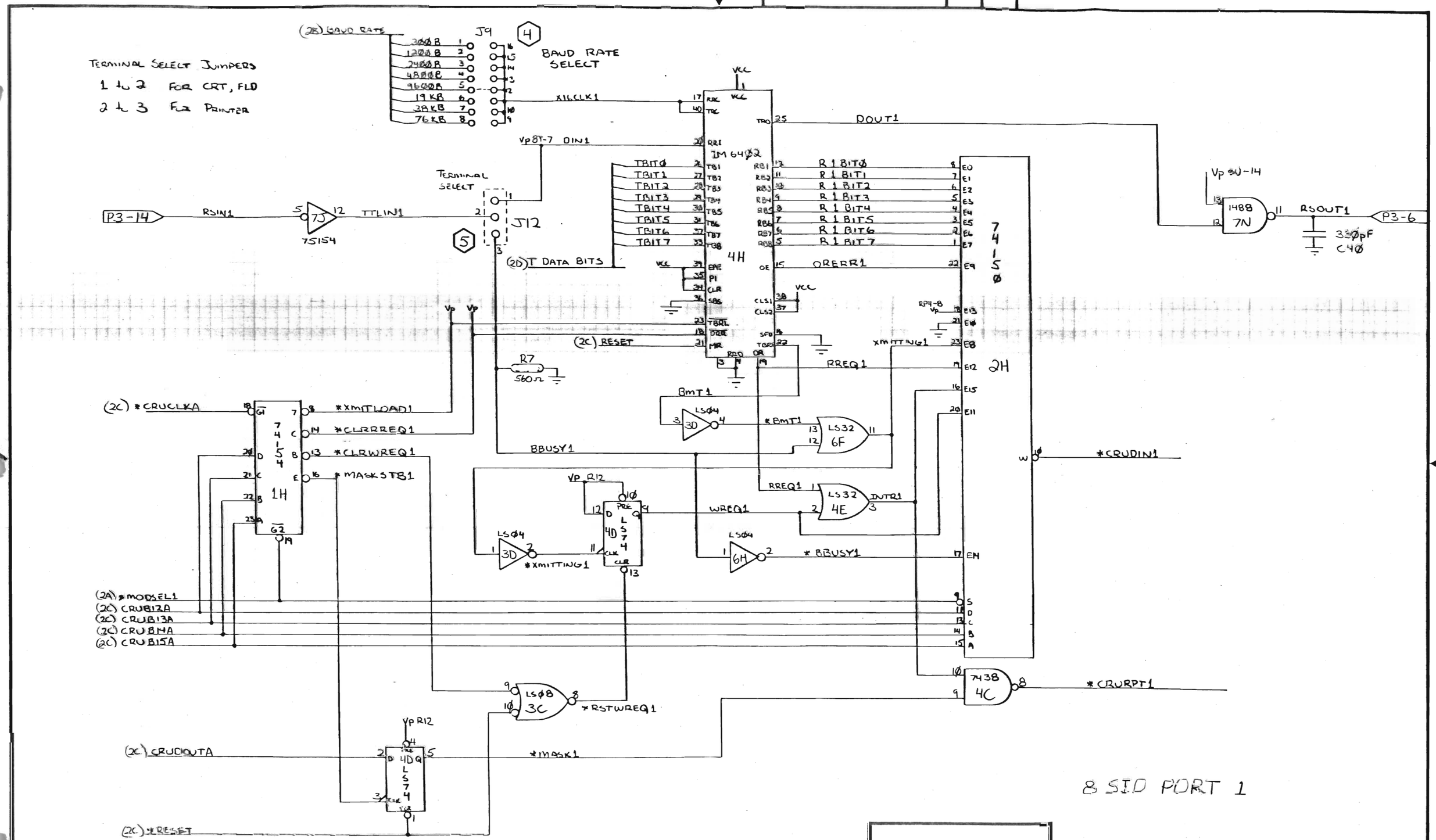

8 SID PORT 1

DRAWN MTM 11/2/80	SIZE B	FSCM NO.	DWG. NO. L1D11D54	REV.
ISSUED	SCALE		SHEET 4 OF 12

BISHOP GRAPHICS/ACCUPRESS
REORDER NO. A-7527

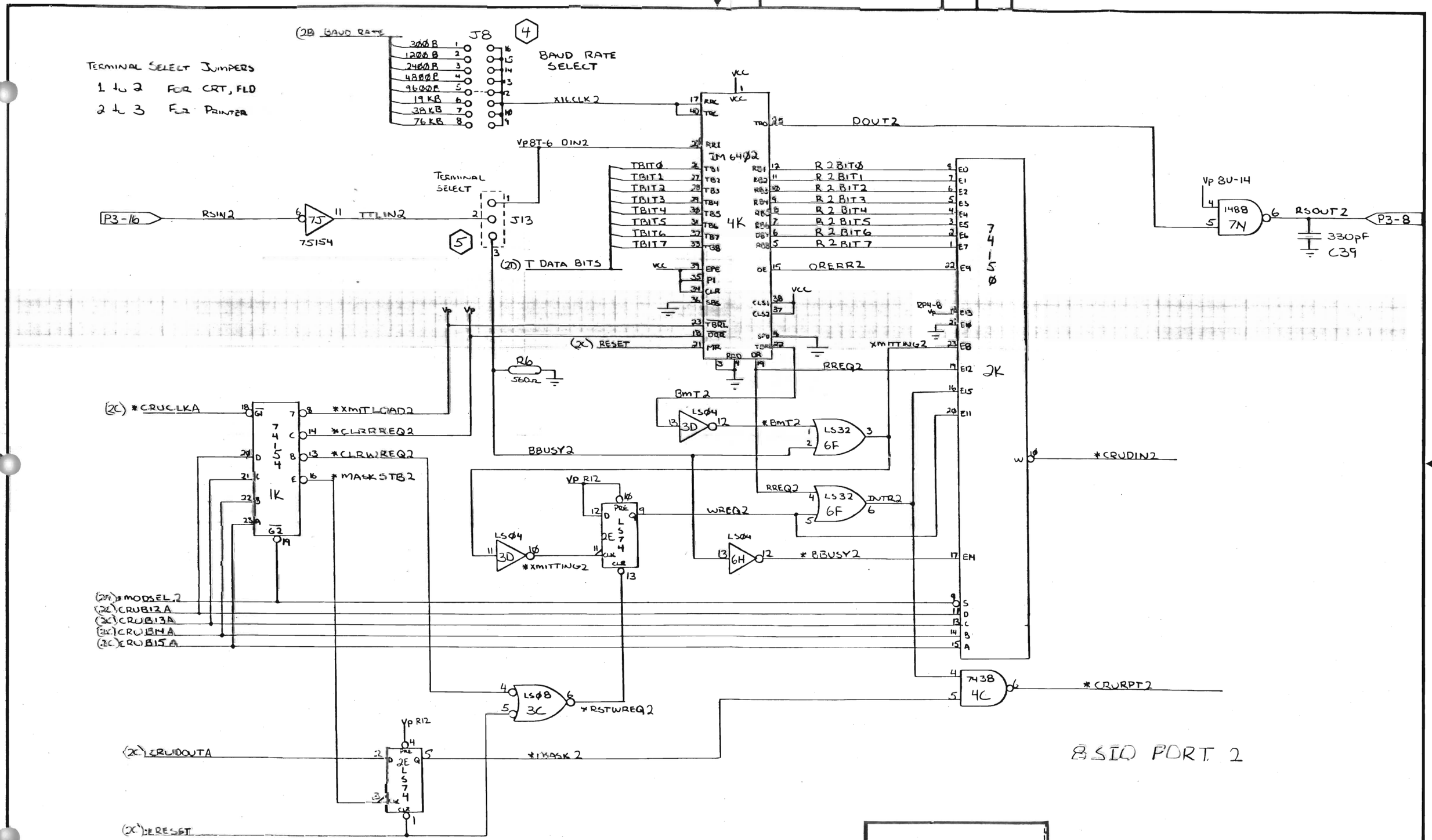
DWG. NO.
SH
REV.
TERMINAL SELECT JUMPERS
1 to 2 FOR CRT, FLD
2 to 3 FOR PRINTER
(2B) BAUD RATE
J8
4
BAUD RATE SELECT
300B
1200B
2400B
4800B
9600B
19KB
38KB
76KB
X16CLK2
DOUT2
VP8T-6 DIN2
TERMINAL SELECT
J13
5
P3-16
RSIN2
7J
75154
TTLIN2
TBIT0
TBIT1
TBIT2
TBIT3
TBIT4
TBIT5
TBIT6
TBIT7
(2D) T DATA BITS
IM 6402
4K
R2BIT0
R2BIT1
R2BIT2
R2BIT3
R2BIT4
R2BIT5
R2BIT6
R2BIT7
OERR2
RESET
R6
560Ω
7415
0
2K
VP 8U-14
1488
7N
RSOUT2
P3-8
330pF
C39
(2C) *CRUCLKA
7454
1K
*XMITLOAD2
*CLRRREQ2
*CLRWREQ2
*MASKSTB2
BMT2
LS04
3D
*BMT2
LS32
6F
BBUSY2
XMITTING2
RREQ2
INTR2
WREQ2
VP R12
LS74
2E
*XMITTING2
*BBUSY2
*CRUDIN2
(2C) *MODSEL2
(2C) CRUBI2A
(2C) CRUBI3A
(2C) CRUBI4A
(2C) CRUBI5A
LS08
3C
*RSTWREQ2
7438
4C
*CRURPT2
(2C) CRUDOUTA
*MASK2
(2C) *RESET
8SIO PORT 2
DRAWN
ISSUED
SIZE B
FSCM NO.
DWG. NO. L1011054
REV.
SCALE
SHEET 5 OF 12
BISHOP GRAPHICS/ACCUPRESS
REORDER NO. A-7527

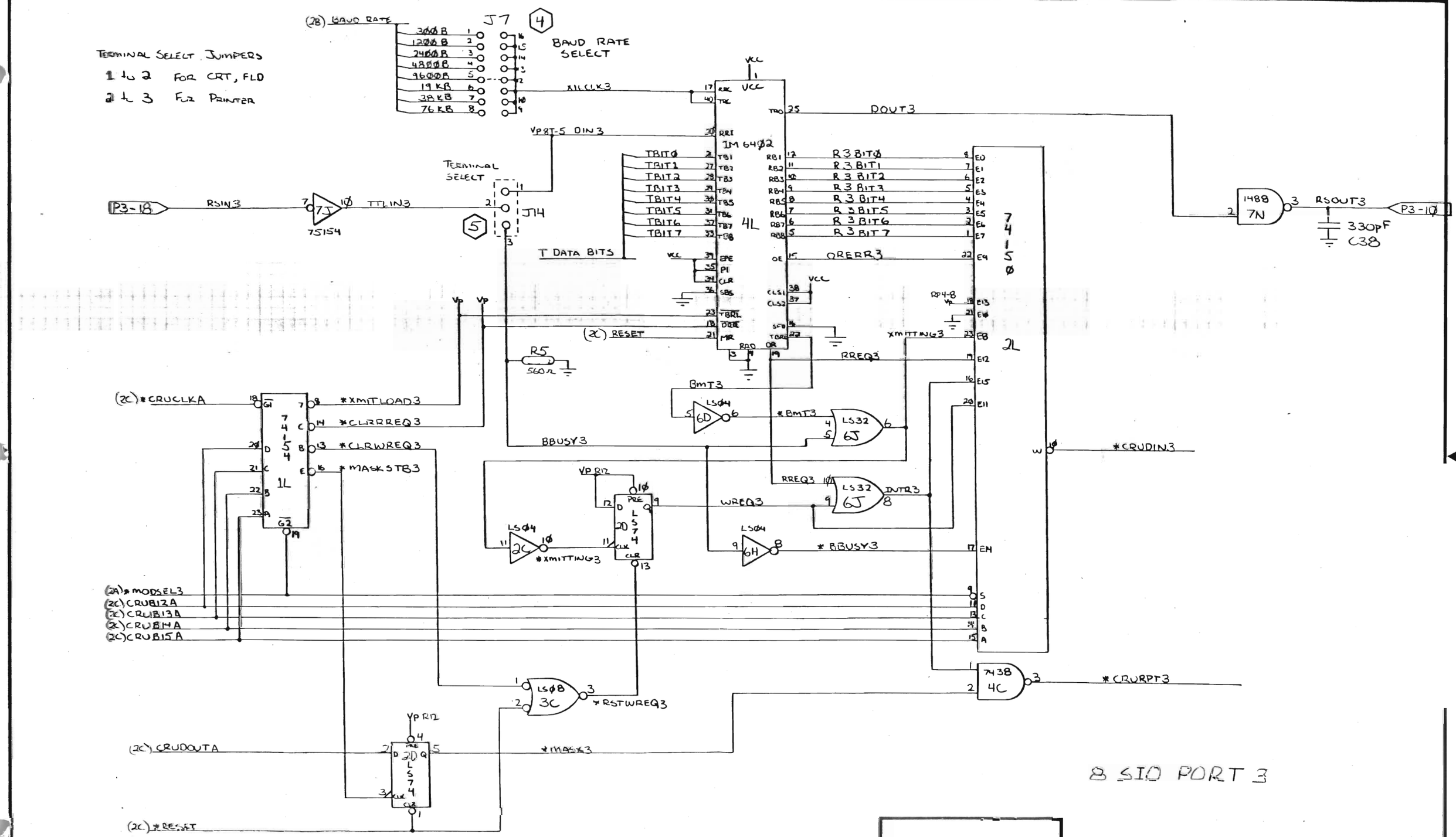
DWG. NO.
SH
REV.
TERMINAL SELECT JUMPERS
1 to 2 FOR CRT, FLD
2 to 3 FOR PRINTER
(2B) BAUD RATE
J7
4
BAUD RATE SELECT
300 B
1200 B
2400 B
4800 B
9600 B
19 KB
38 KB
76 KB
X11CLK3
VP8T-5 DIN3
TERMINAL SELECT
J14
5
P3-18
RSIN3
7J
75154
TTLIN3
IM 6402
4L
TBIT0
TBIT1
TBIT2
TBIT3
TBIT4
TBIT5
TBIT6
TBIT7
T DATA BITS
DOUT3
R3BIT0
R3BIT1
R3BIT2
R3BIT3
R3BIT4
R3BIT5
R3BIT6
R3BIT7
ORERR3
7415
2L
1488
7N
RSOUT3
P3-10
330pF
C38
(2C) RESET
R5
560Ω
(2C) *CRUCLKA
7454
1L
*XMITLOAD3
*CLRRREQ3
*CLRWREQ3
*MASKSTB3
BMT3
LS04
6D
*BMT3
LS32
6J
BBUSY3
XMITTING3
RREQ3
INTR3
WREQ3
VP R12
LS74
2D
LS04
2C
*XMITTING3
LS04
6H
*BBUSY3
*CRUDIN3
(2A) *MODSEL3
(2C) CRUBI2A
(2C) CRUBI3A
(2C) CRUBI4A
(2C) CRUBI5A
LS08
3C
*RSTWREQ3
7438
4C
*CRURPT3
(2C) CRUDOUTA
*MASK3
(2C) *RESET
8 SIO PORT 3
DRAWN
ISSUED
SIZE
B
FSCM NO.
DWG. NO.
L1011054
REV.
SCALE
SHEET 6 OF 12
BISHOP GRAPHICS/ACCUPRESS
REORDER NO. A-7127

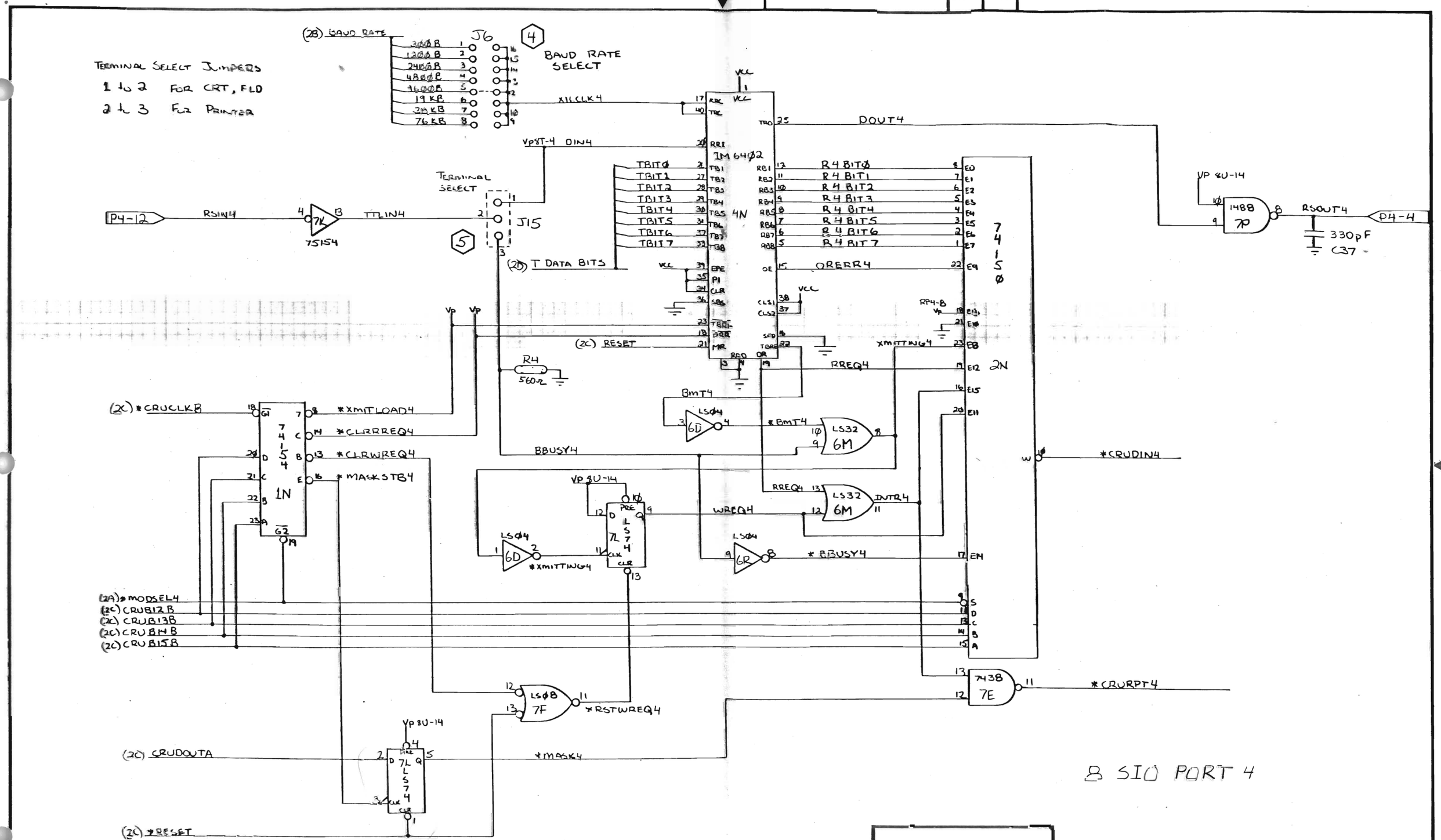

DWG. NO.	SH	REV.

DRAWN mTm 11/2/80	SIZE B	FSCM NO.	DWG. NO. L1011054	REV.
ISSUED	SCALE		SHEET 7 OF 12	

BISHOP GRAPHICS/ACCUPRESS
REORDER NO. A-7527

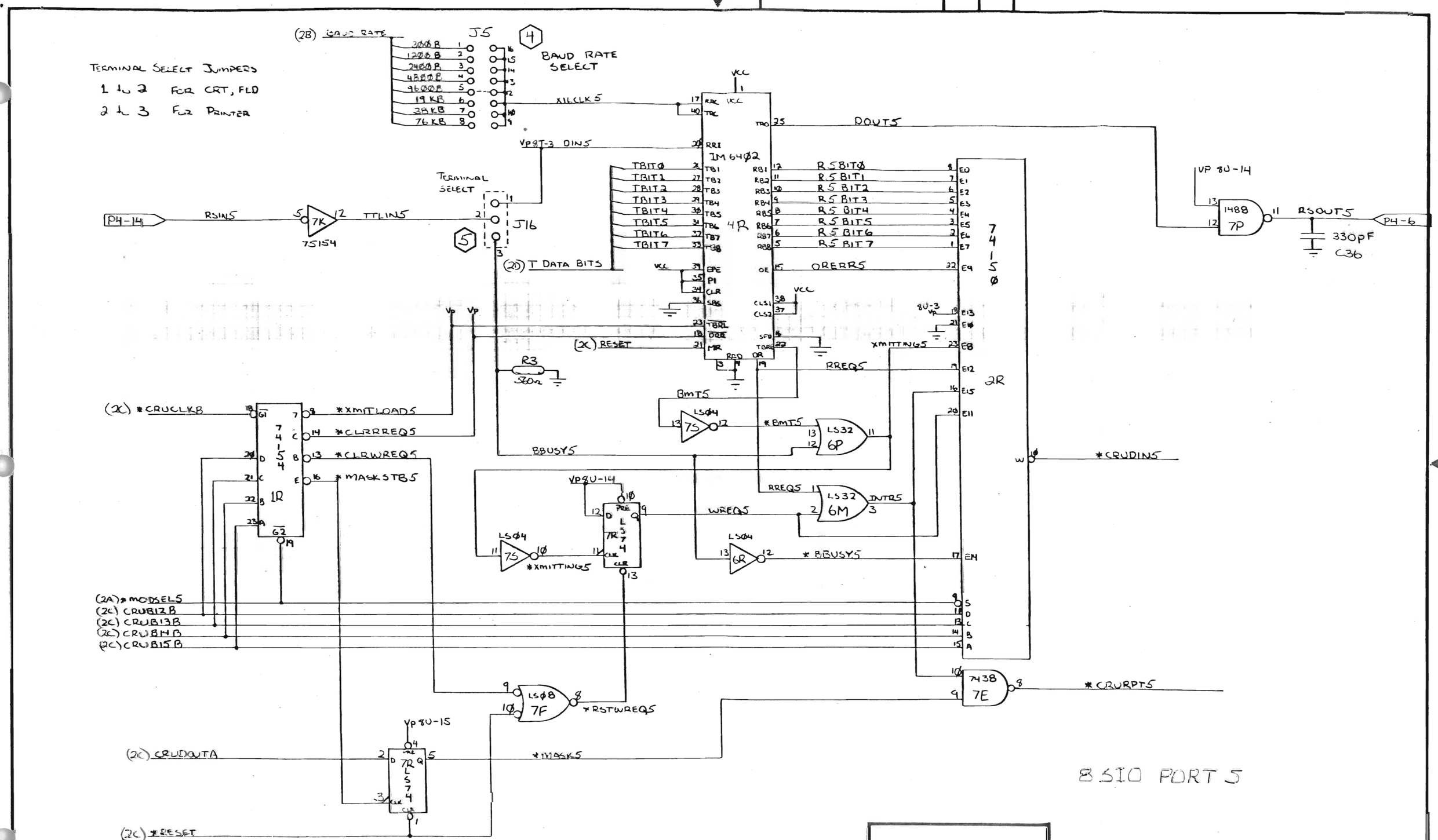
DWG. NO.
SH
REV.
TERMINAL SELECT JUMPERS
1 to 2 FOR CRT, FLD
2 to 3 FOR PRINTER
(2B) BAUD RATE
J5
300 B
1200 B
2400 B
4800 B
9600 B
19 KB
38 KB
76 KB
4
BAUD RATE SELECT
XILCLK5
VP8T-3 DIN5
TERMINAL SELECT
J16
5
P4-14
RSIN5
7K
75154
TTLIN5
TBIT0
TBIT1
TBIT2
TBIT3
TBIT4
TBIT5
TBIT6
TBIT7
(2D) T DATA BITS
IM 6402
4R
DOUT5
RSBIT0
RSBIT1
RSBIT2
RSBIT3
RSBIT4
RSBIT5
RSBIT6
RSBIT7
ORERR5
VP 8U-14
1488
7P
RSOUT5
P4-6
330pF
C36
7415
2R
(2X) RESET
R3
560Ω
XMITTING5
RREQ5
BMT5
LS04
7S
*BMT5
LS32
6P
BBUSY5
(2C) *CRUCLKB
74154
1R
*XMITLOAD5
*CLRRREQ5
*CLRWREQ5
*MASKSTB5
VP8U-14
LS74
7R
WREQ5
LS32
6M
INTR5
LS04
6R
*BBUSY5
*XMITTING5
*CRUDIN5
(2A) *MODSEL5
(2C) CRUBI2B
(2C) CRUBI3B
(2C) CRUBI4B
(2C) CRUBI5B
LS08
7F
*RSTWREQ5
7438
7E
*CRUPT5
VP8U-15
(2C) CRUDOUTA
*MASK5
(2C) *RESET
8 SIO PORT 5
DRAWN
ISSUED
SIZE
B
FSCM NO.
DWG. NO.
L1011054
REV.
SCALE
SHEET 8 OF 12
BISHOP GRAPHICS/ACCUPRESS
RECORDER NO. A-7527

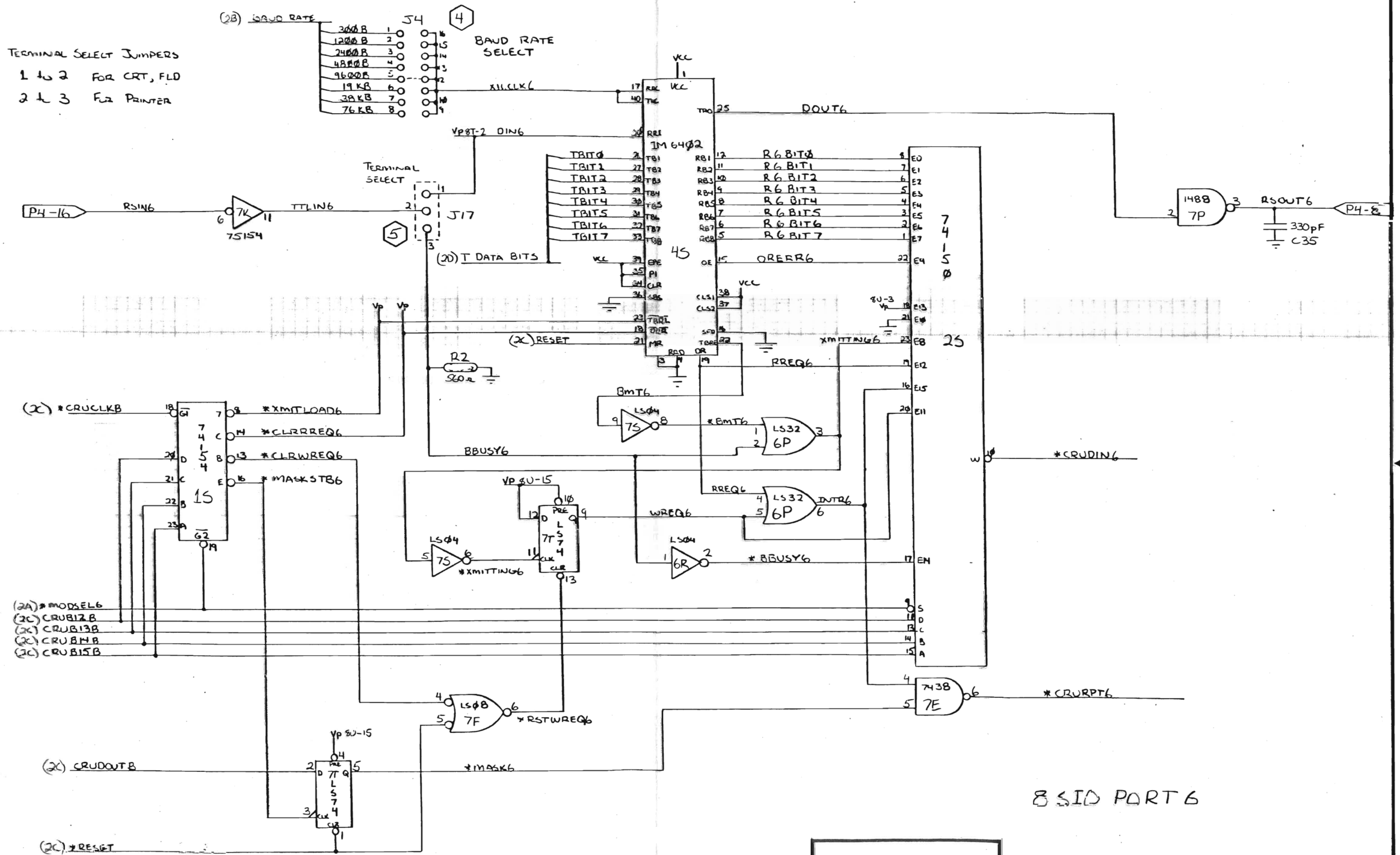

8SID PART 6

DRAWN	MTM 11/2/80	SIZE B	FSCM NO.	DWG. NO. L1011054	REV.
ISSUED		SCALE		SHEET 9 OF 12	

BISHOP GRAPHICS/ACCUPRESS
REORDER NO. A-7527

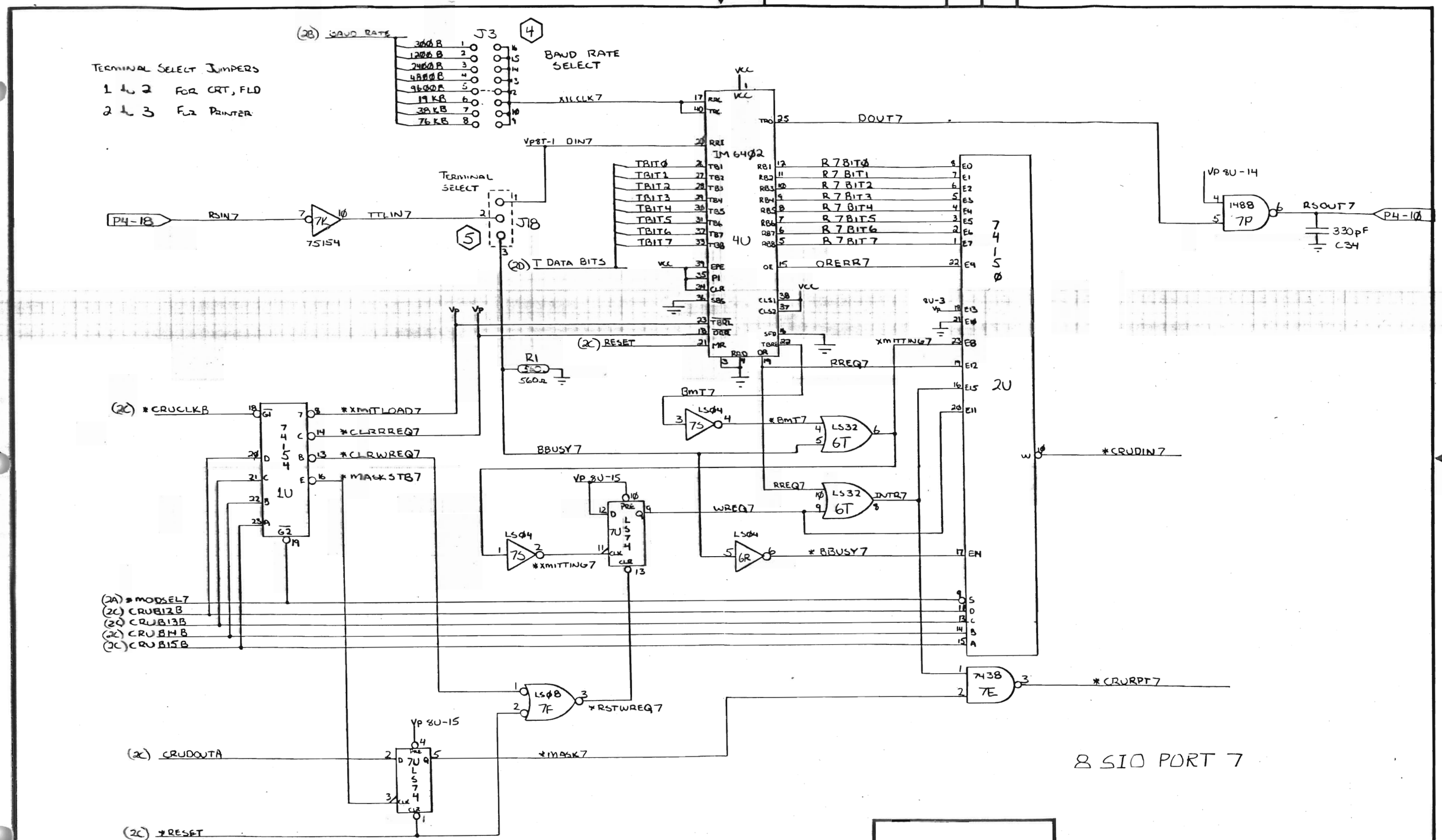

8 SIO PORT 7

DRAWN MTM 11/2/80	SIZE B	FSCM NO.	DWG. NO. L1011054	REV.
ISSUED	SCALE		SHEET 10 OF 12	

BISHOP GRAPHICS/ACCUPRESS
REORDER NO. A-7527

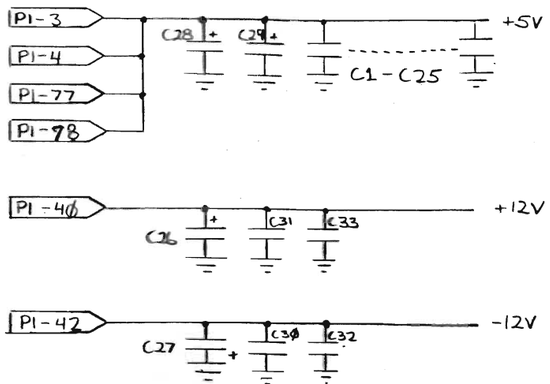

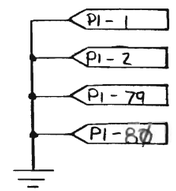

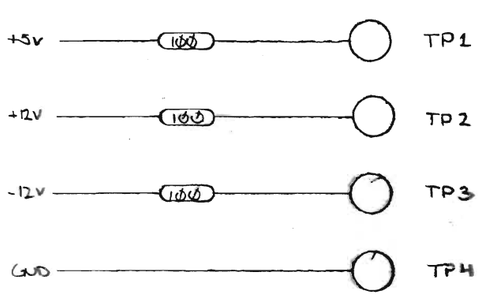

VOLTAGE TEST POINTS

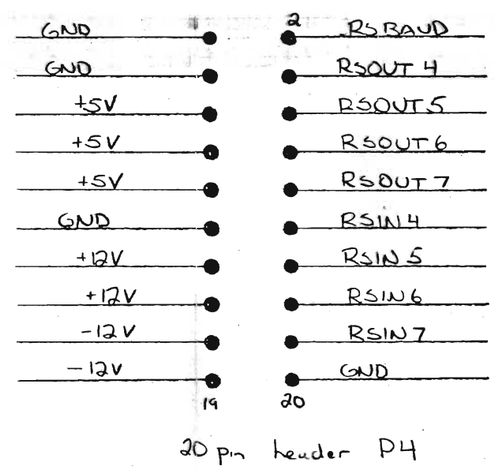

20 pin header P4

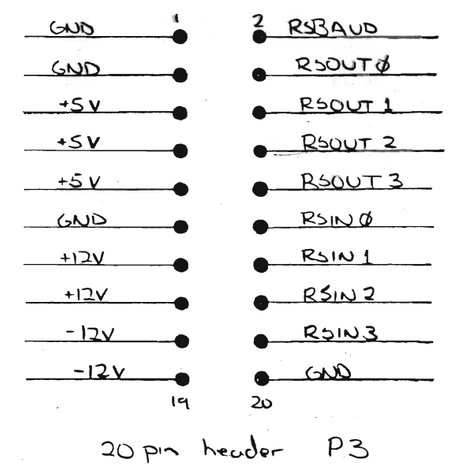

20 pin header P3

T-1800 & 510
CONNECTOR DIAGRAMS

MTM 9/3/80

L011054

REVISIONS			
LTR	DESCRIPTION	DATE	APPROVED

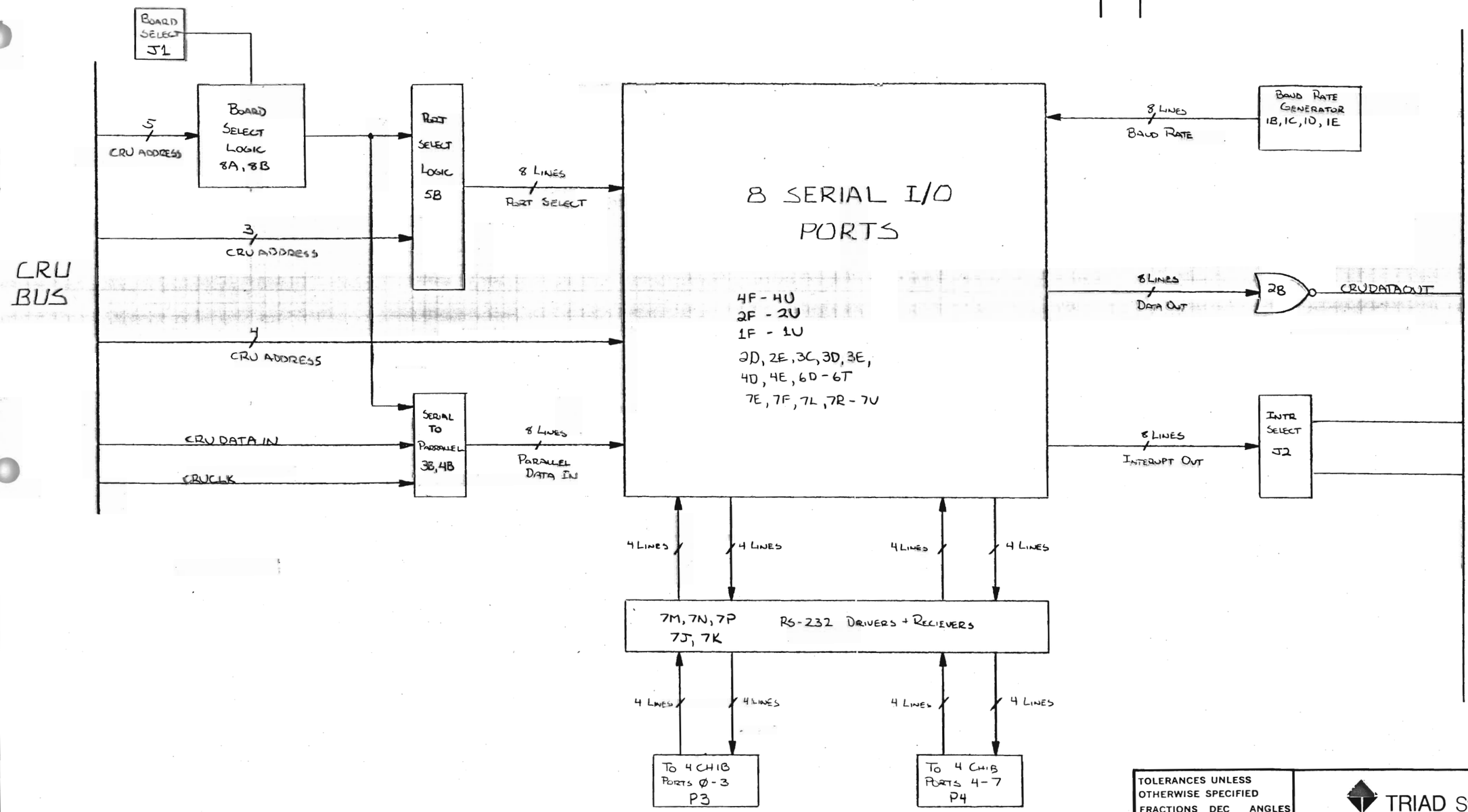

TOLERANCES UNLESS OTHERWISE SPECIFIED		
FRACTIONS ±	DEC ±	ANGLES ±

APPROVALS	DATE
DRAWN MTM	11/4/80
CHECKED	

TRIAD Systems Corporation

8 SIO
BLOCK DIAGRAM

SCALE	SIZE	DRAWING NO.
	B	L1011054
DO NOT SCALE DRAWING		SHEET 12 OF 12

BISHOP GRAPHICS/ACCUPRESS
REORDER NO. A-8683

REVISIONS			
LTR	DESCRIPTION	DATE	APPROVED
109	PRE-PRODUCTION RELEASE	[illegible]	[illegible]

TOLERANCES UNLESS OTHERWISE SPECIFIED

FRACTIONS	DEC	ANGLES
±	±	±

APPROVALS	DATE
DRAWN G. TAYLOR	10-31-80
CHECKED G. TAYLOR	12-15-80

TRIAD Systems Corporation

SCHEMATIC - 4 CHANNEL INTERFACE BOARD

SCALE | SIZE B | DRAWING NO. L1012003

DO NOT SCALE DRAWING | SHEET 1 OF 2

©SHOP GRAPHICS/ACCUPRESS
RECORDER NO. A-8683

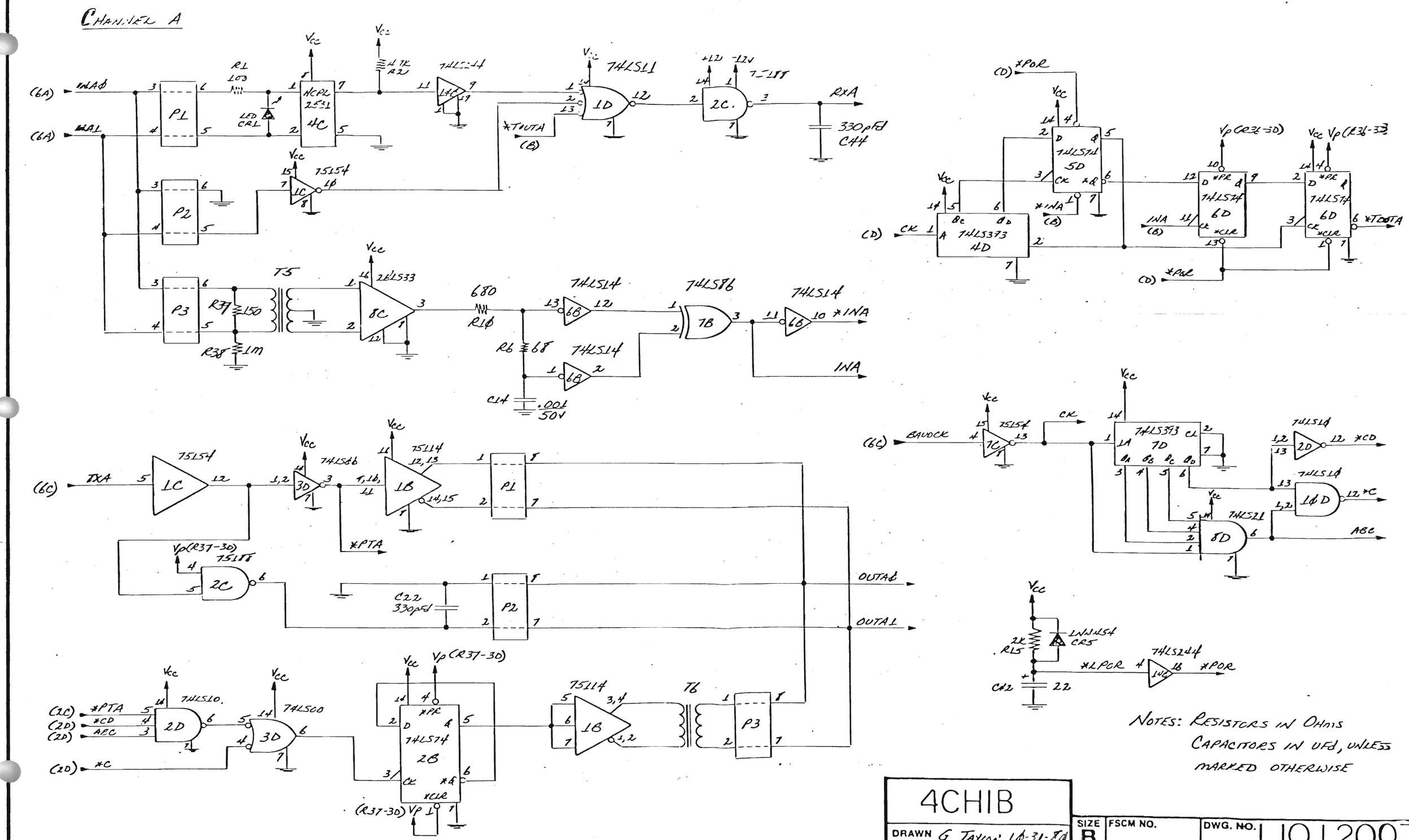

NOTES: RESISTORS IN OHMS
CAPACITORS IN UFd, UNLESS
MARKED OTHERWISE

4CHIB			
DRAWN G TAYLOR 10-31-80	SIZE B	FSCM NO.	DWG. NO. L1012003
ISSUED	SCALE		SHEET 2 OF 7

BISHOP GRAPHICS/ACCUPRESS

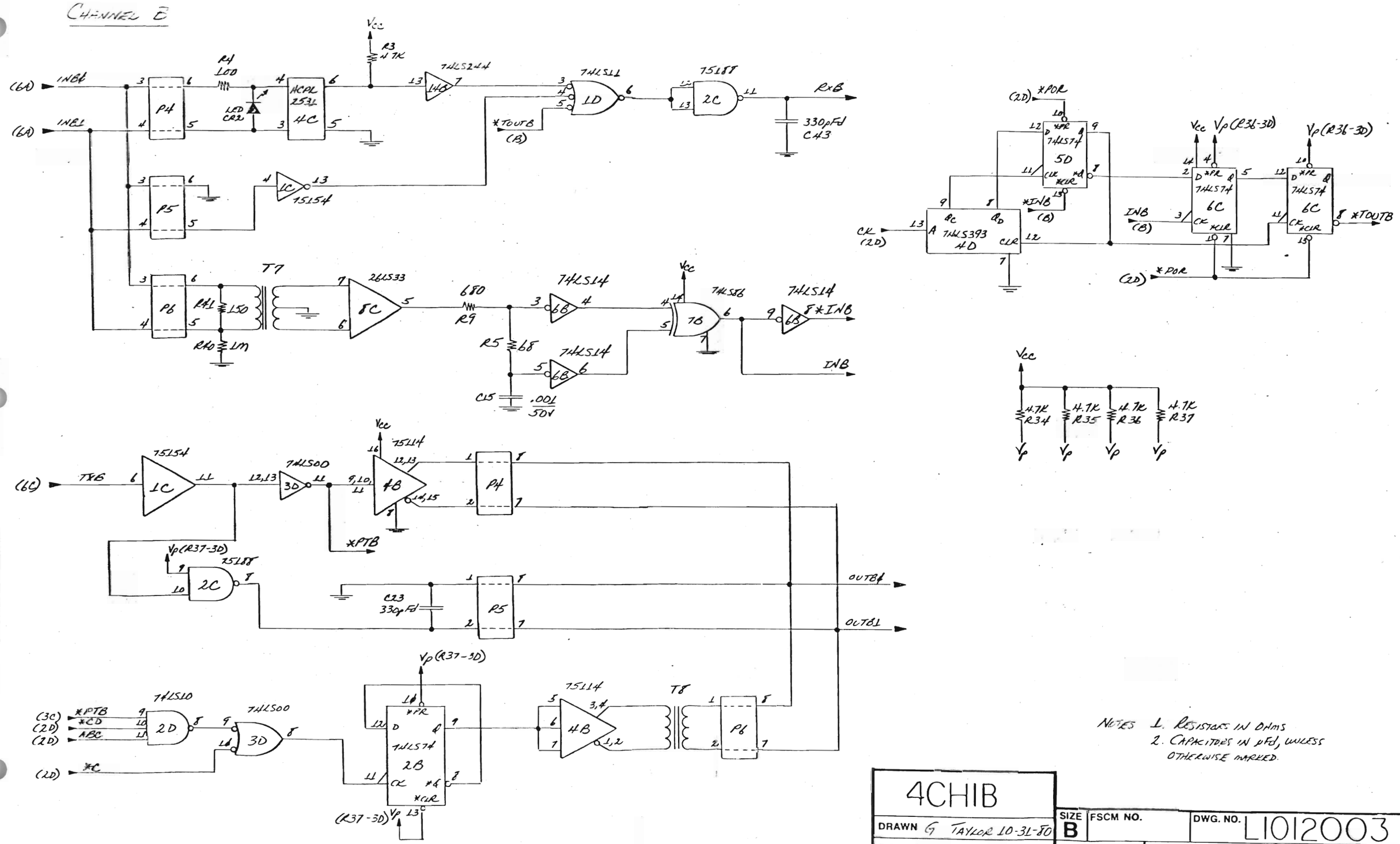

4CHIB			
DRAWN G TAYLOR 10-31-80	SIZE B	FSCM NO.	DWG. NO. L1012003	REV.
ISSUED	SCALE		SHEET 3 OF 7

BISHOP GRAPHICS/ACCUPRESS
REORDER NO. A-7527

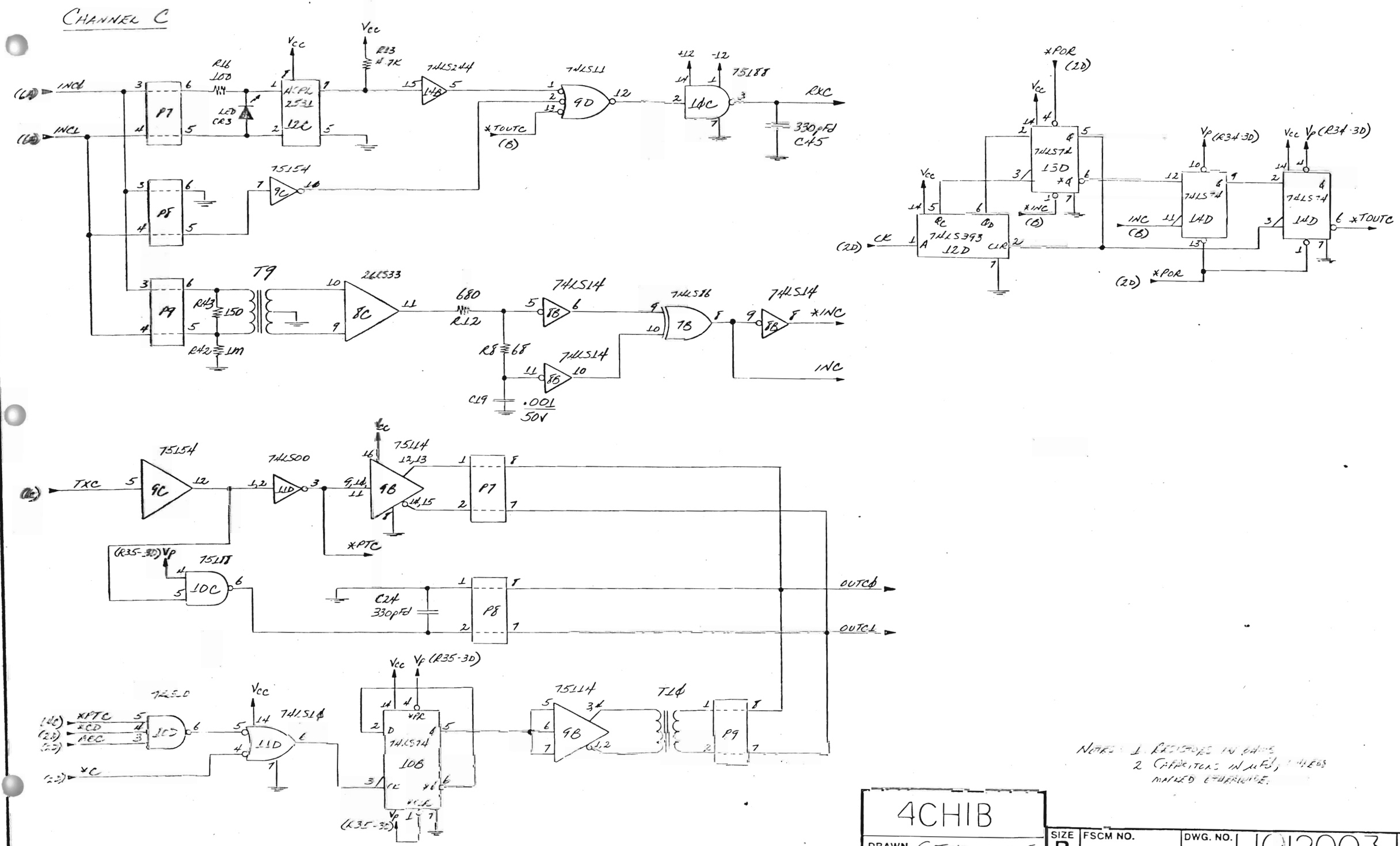

NOTES: 1 RESISTORS IN OHMS
2 CAPACITORS IN µFD, VALUES MARKED OTHERWISE.

4CHIB				
DRAWN G TAYLOR 10-31-76	SIZE B	FSCM NO.	DWG. NO. L1012003	REV.
ISSUED	SCALE		SHEET 4 OF 7	

GRAPHICS/ACCUPRESS
ORDER NO. A-7527

DWG. NO.	SH	REV.

CHANNEL D

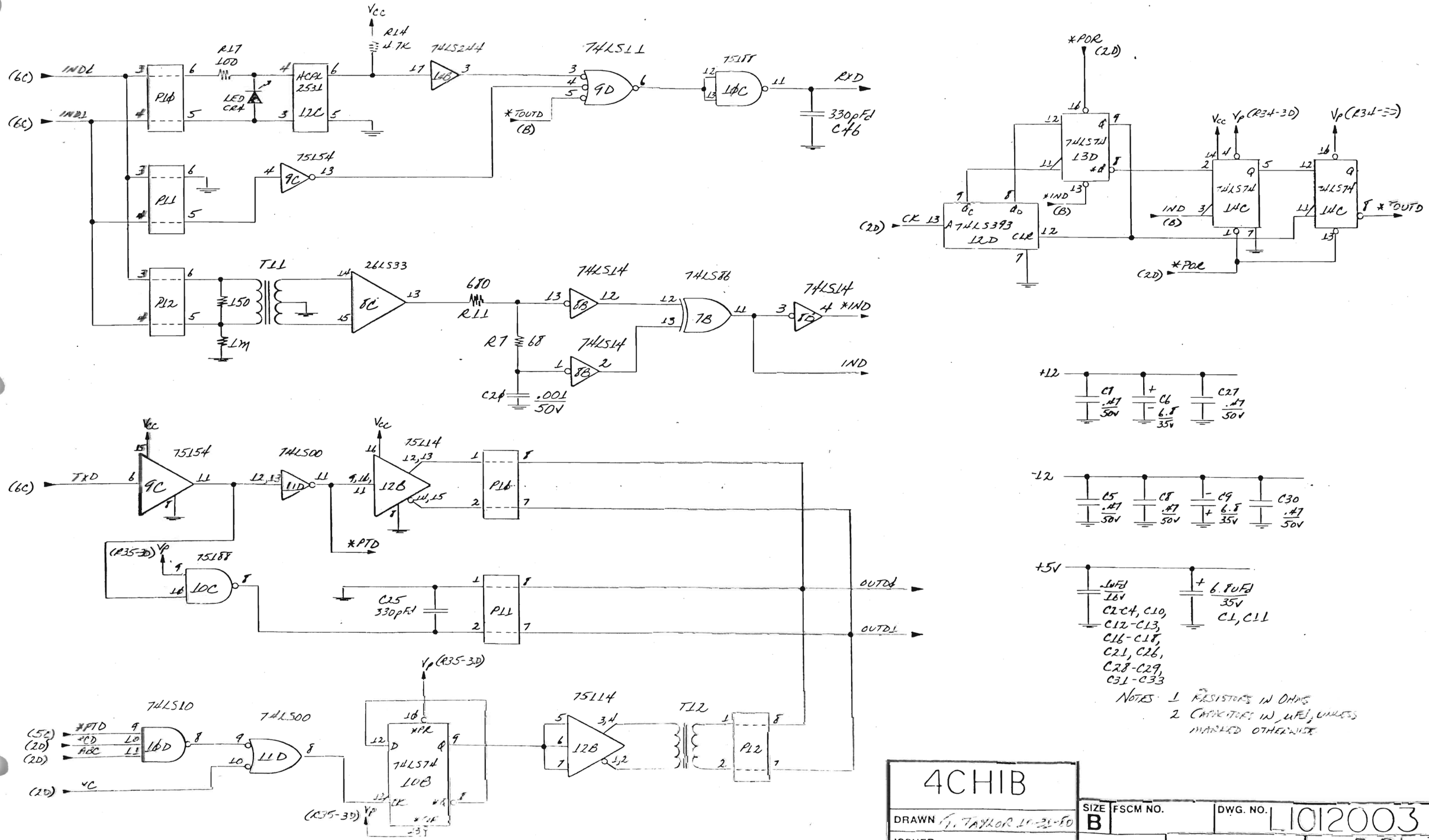

4CHIB			
DRAWN G. TAYLOR 10-31-80	SIZE B	FSCM NO.	DWG. NO. L1012003	REV.
ISSUED	SCALE		SHEET 5 OF 7

BISHOP GRAPHICS/ACCUPRESS REORDER NO. A-3527

REVISIONS			
LTR	DESCRIPTION	DATE	APPROVED
809	PRE-PRODUCTION RELEASE	12-15-80	G. Taylor
1126	TIMING CHANGES XFORMER INT	5/27/81	MTM
1179	PRODUCTION RELEASE + PARTS LIST CHANGE	7/2/81	MTM

TOLERANCES UNLESS OTHERWISE SPECIFIED		
FRACTIONS	DEC	ANGLES
±	±	±

APPROVALS	DATE
DRAWN G. TAYLOR	10-31-80
CHECKED G. TAYLOR	12-15-80

TRIAD Systems Corporation

SCHEMATIC - 4 CHANNEL INTERFACE BOARD

SCALE	SIZE	DRAWING NO.
	B	L1012003

DO NOT SCALE DRAWING

SHEET 1 OF 7

BISHOP GRAPHICS/ACCUPRESS
REORDER NO. A-8693

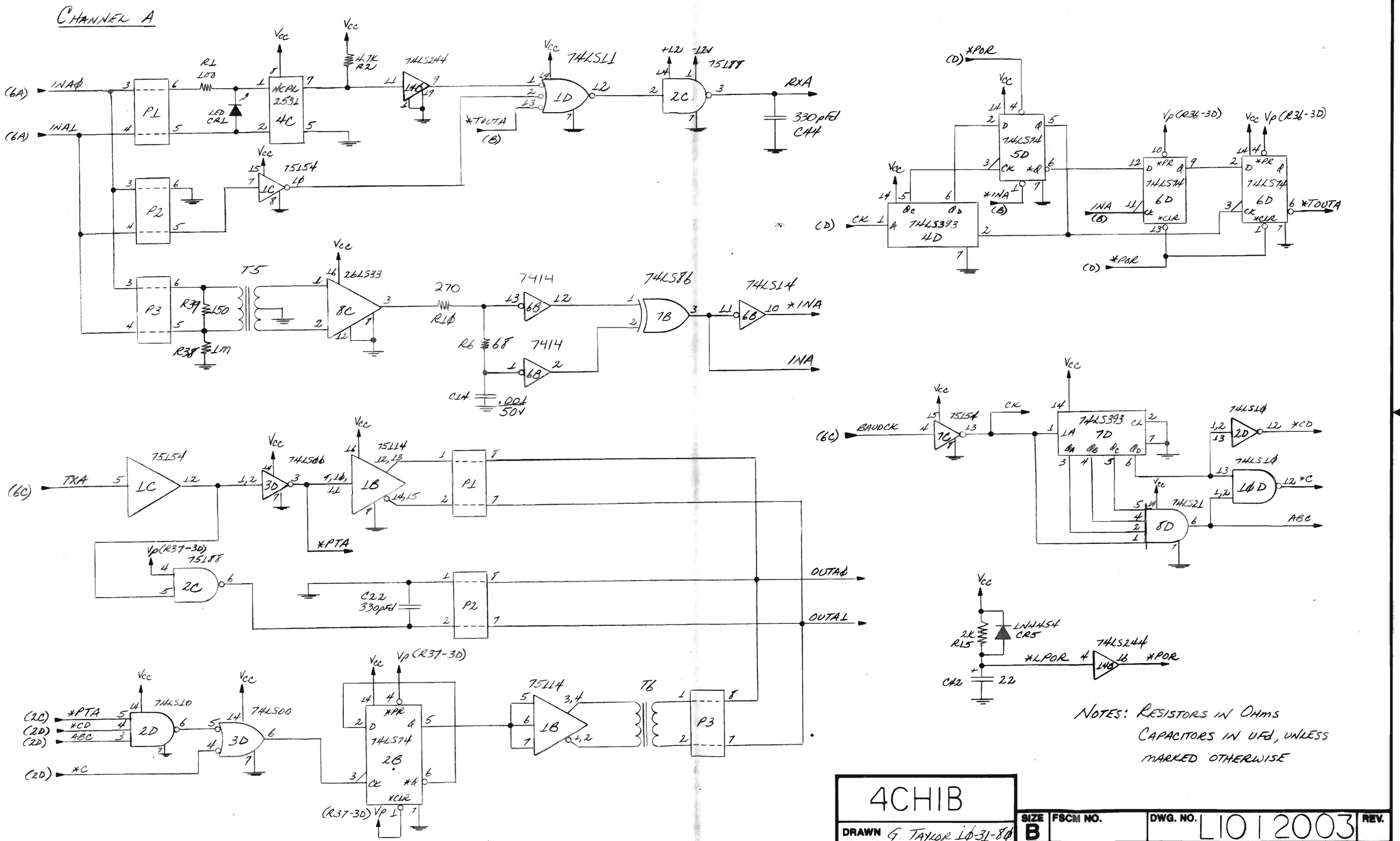

NOTES: RESISTORS IN OHMS
CAPACITORS IN UFd, UNLESS
MARKED OTHERWISE

4CHIB				
DRAWN G. TAYLOR 10-31-80	SIZE B	FSCM NO.	DWG. NO. L1012003	REV.
ISSUED	SCALE		SHEET 2 OF 7	

BISHOP GRAPHICS/ACCUPRESS
REORDER NO. A-7527

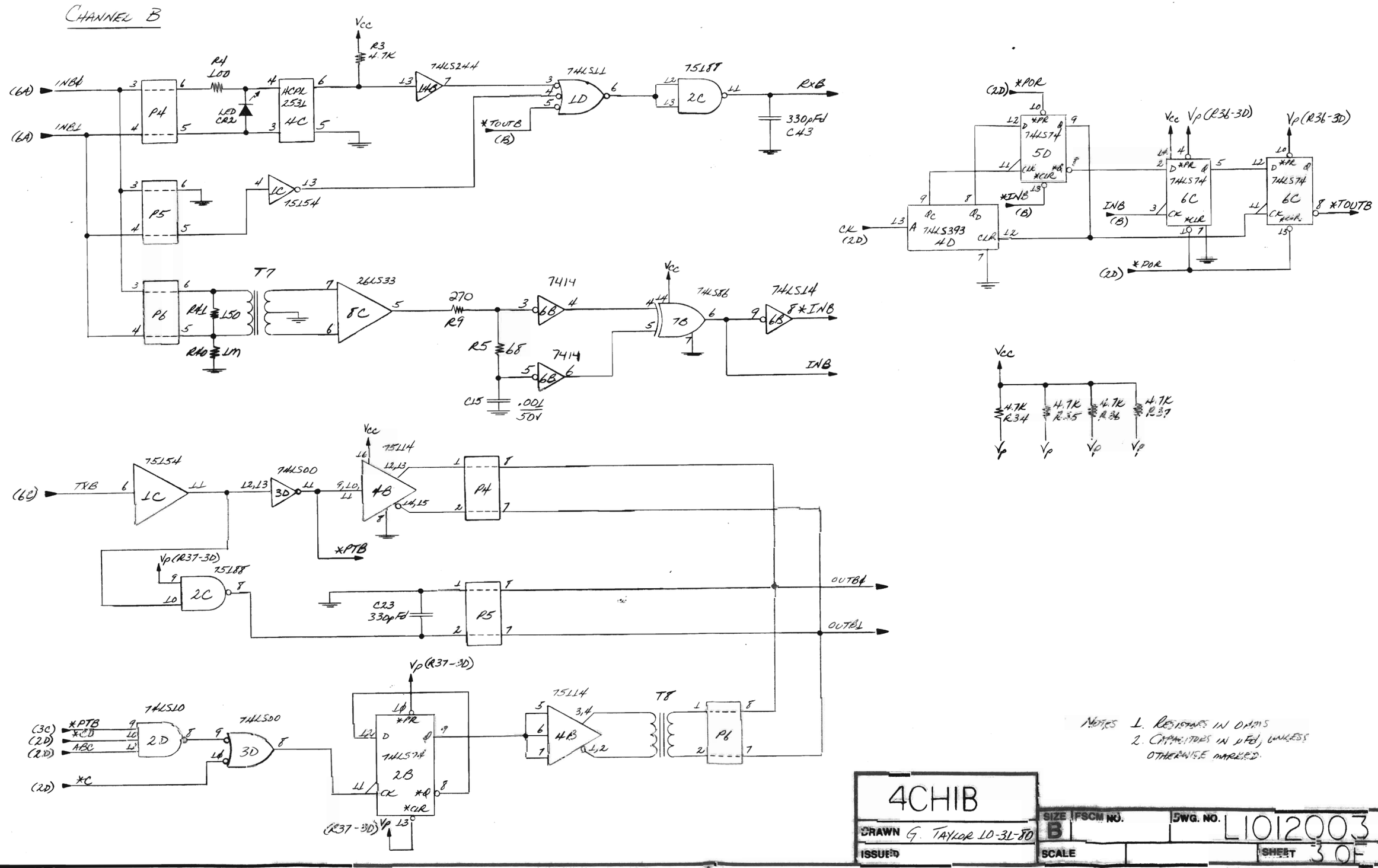

NOTES 1. RESISTORS IN OHMS
2. CAPACITORS IN µFd, UNLESS OTHERWISE MARKED.

4CHIB			
DRAWN G. TAYLOR 10-31-80	SIZE B	FSCM NO.	DWG. NO. L1012003	REV.
ISSUED	SCALE		SHEET 3 OF 7

BISHOP GRAPHICS/ACCUPRESS

DWG. NO.	SH	REV.

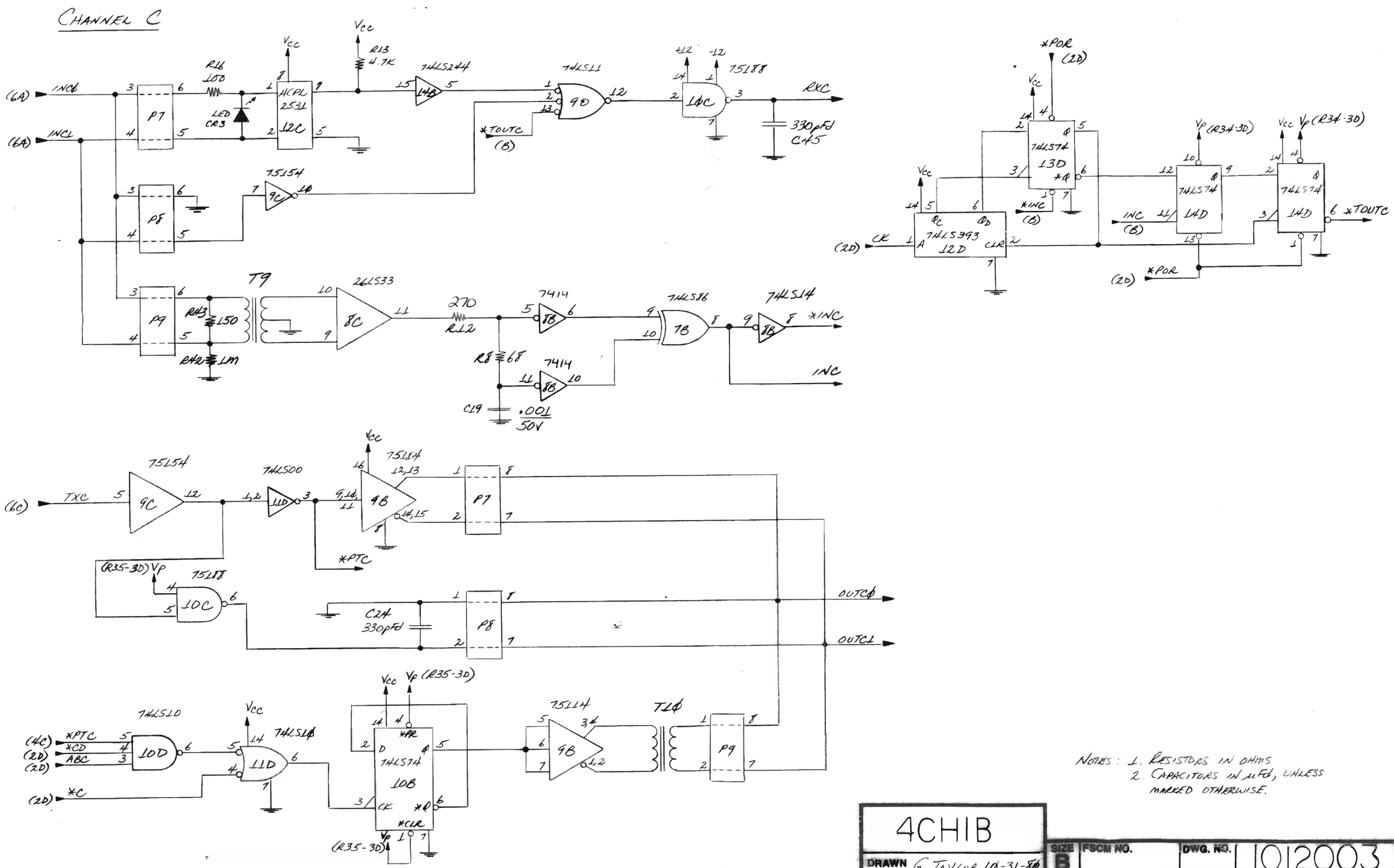

4CHIB			
DRAWN G. TAYLOR 10-31-80	SIZE B	FSCM NO.	DWG. NO. L1012003	REV.
ISSUED	SCALE		SHEET 4 OF 7

DWG. NO.	SH	REV.

CHANNEL D

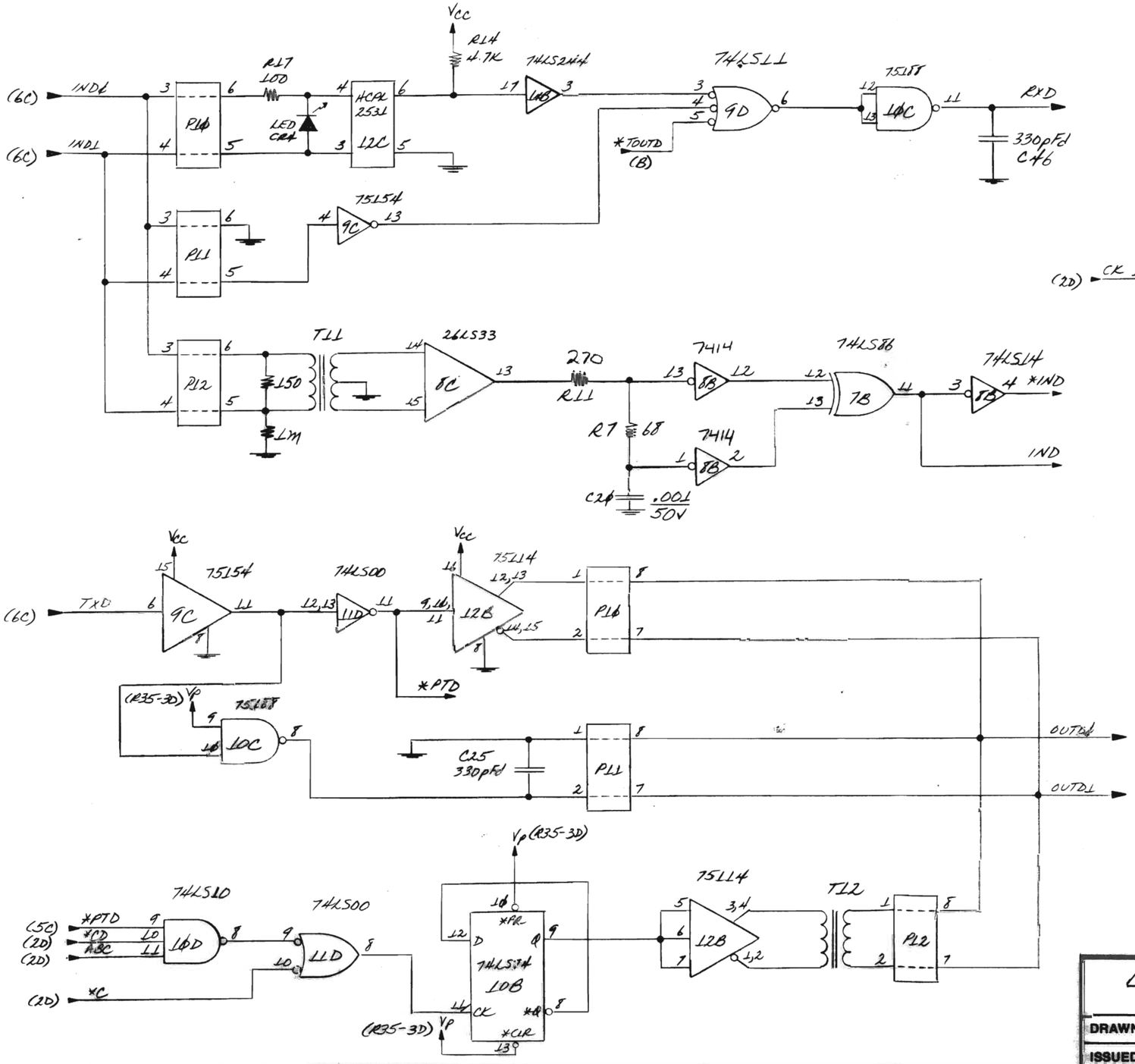

NOTES: 1. RESISTORS IN OHMS
2. CAPACITORS IN µFd, UNLESS MARKED OTHERWISE

4CHIB				
DRAWN G. TAYLOR 10-31-80	SIZE B	FSCM NO.	DWG. NO. L1012003	REV.
ISSUED	SCALE		SHEET 5 OF 7	

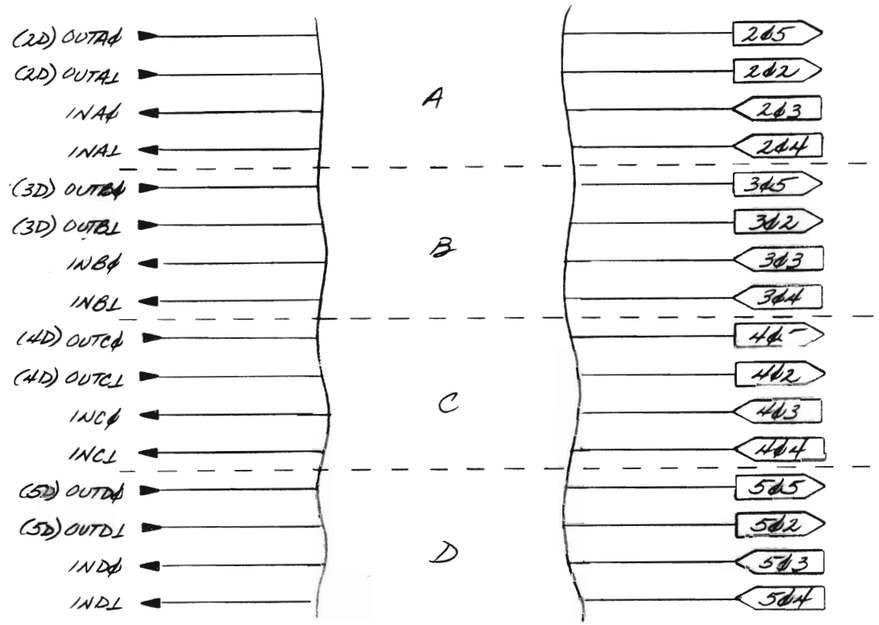

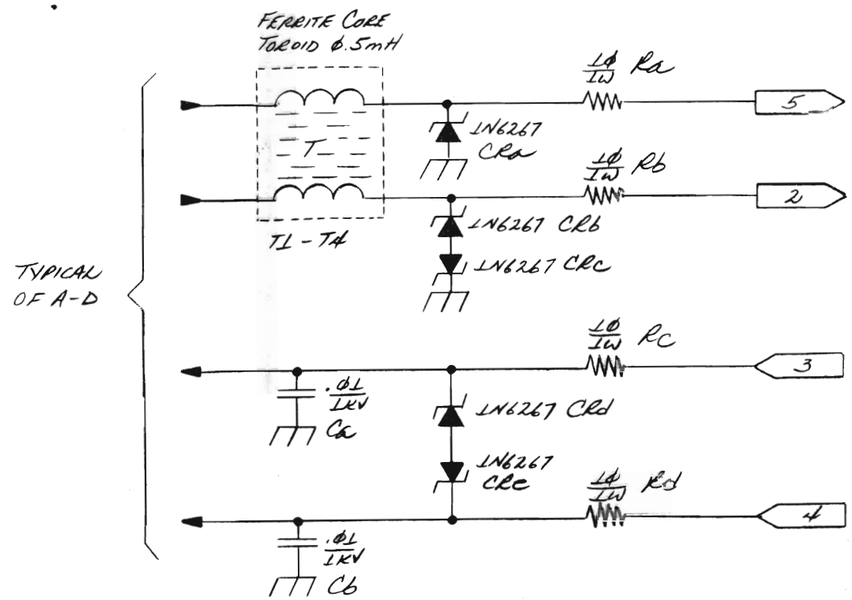

Ra : R18, R22, R26, R30
Rb : R19, R23, R27, R31
Rc : R20, R24, R28, R32
Rd : R21, R25, R29, R33
CRa: CR10, CR15, CR20, CR25
CRb : CR9, CR14, CR19, CR24
CRc : CR8, CR13, CR18, CR23
CRd: CR7, CR12, CR17, CR22
CRe : CR6, CR11, CR16, CR21
Ca : C34, C36, C38, C40
Cb : C35, C37, C39, C41

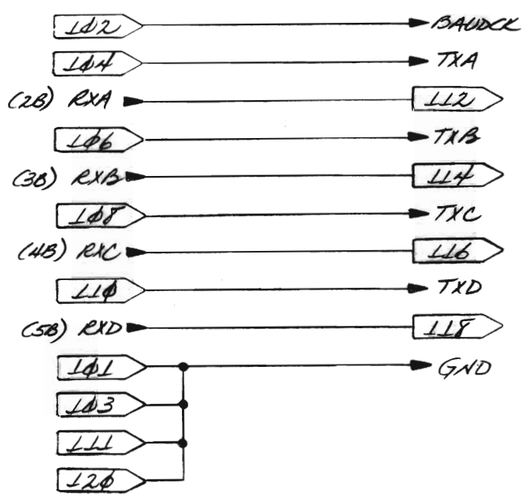

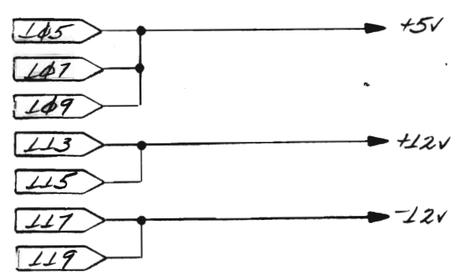

NOTES: ⊓ : GROUND PLANE

CAPACITORS IN uFd, UNLESS OTHERWISE NOTED.
RESISTORS IN OHMS, UNLESS OTHERWISE NOTED.

4CHIB				
DRAWN G. TAYLOR 10-31-80	SIZE B	FSCM NO.	DWG. NO. L1012003	REV.
ISSUED	SCALE		SHEET 6 OF 7	

BISHOP GRAPHICS/ACCUPRESS

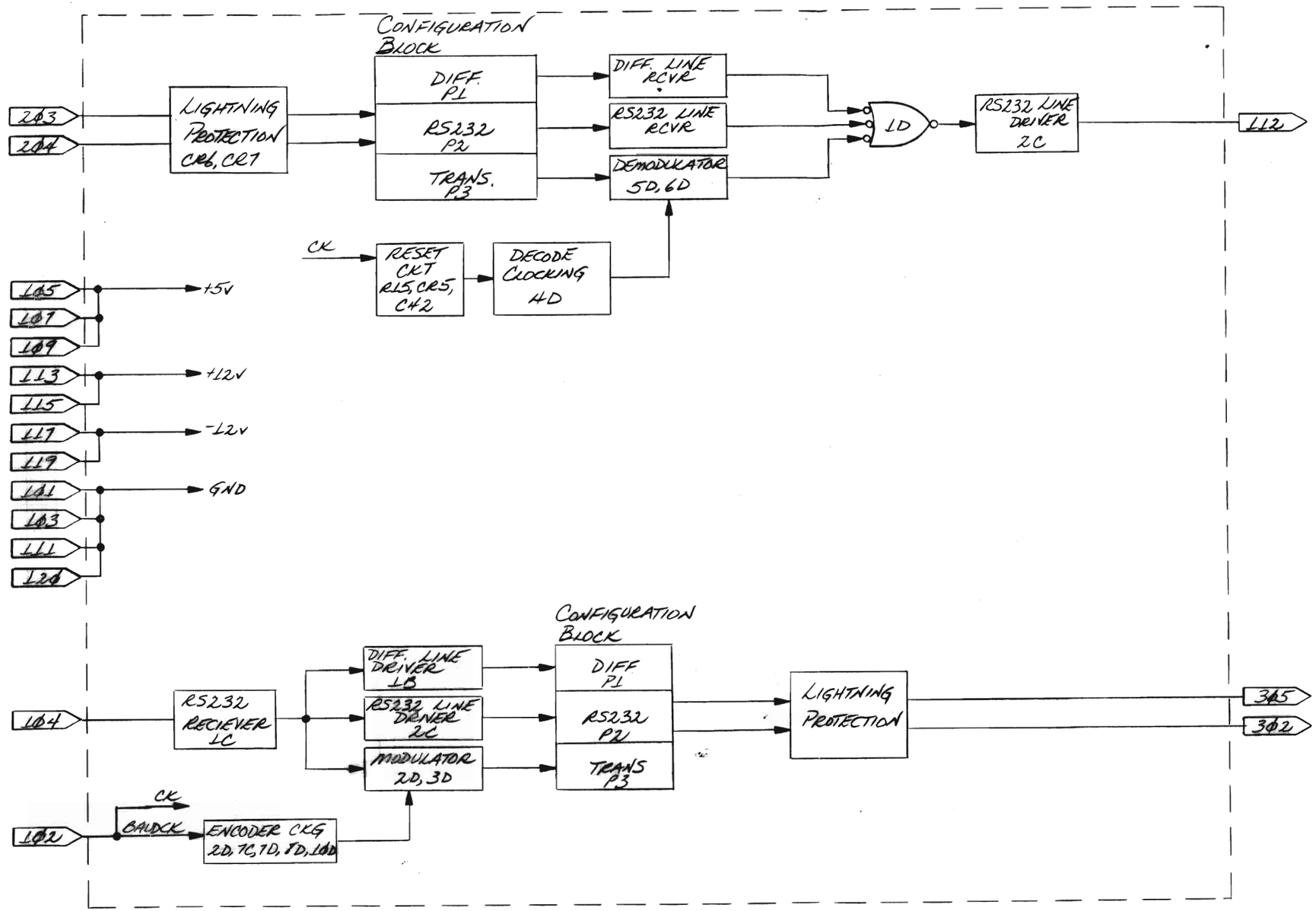

NOTES: 1. BLOCK DIAGRAM FOR CHAN 'A' ONLY; OTHER CHANNELS IDENTICAL.
2. REFERENCE L1012003.

BLOCK DIAG 4CHIB			
DRAWN A. Taylor 11-5-80	SIZE B	FSCM NO.	DWG. NO. L1012003 REV.
ISSUED	SCALE		SHEET 7 OF 7

REVISIONS			
LTR	DESCRIPTION	DATE	APPROVED
709	PRE PRODUCTION RELEASE ECO 709	9/2/80	MTM
710	PRODUCTION RELEASE	10-13-80	MTM

NOTES

(1) JUMPER J1 AS FOLLOWS
1 to 5
2 to 7

ECO PENDING
JAN 09 1981

TOLERANCES UNLESS OTHERWISE SPECIFIED		
FRACTIONS ±	DEC ±	ANGLES ±
APPROVALS	DATE	
DRAWN MTM	8/28/80	
CHECKED		

TRIAD Systems Corporation

T-1800
128K ECM SCHEMATIC

SCALE	SIZE	DRAWING NO.
	B	L100715

DO NOT SCALE DRAWING — SHEET 1 OF 11

BISHOP GRAPHICS/ACCUPRESS
REORDER NO. A-3583

REVISIONS			
LTR	DESCRIPTION	DATE	APPROVED

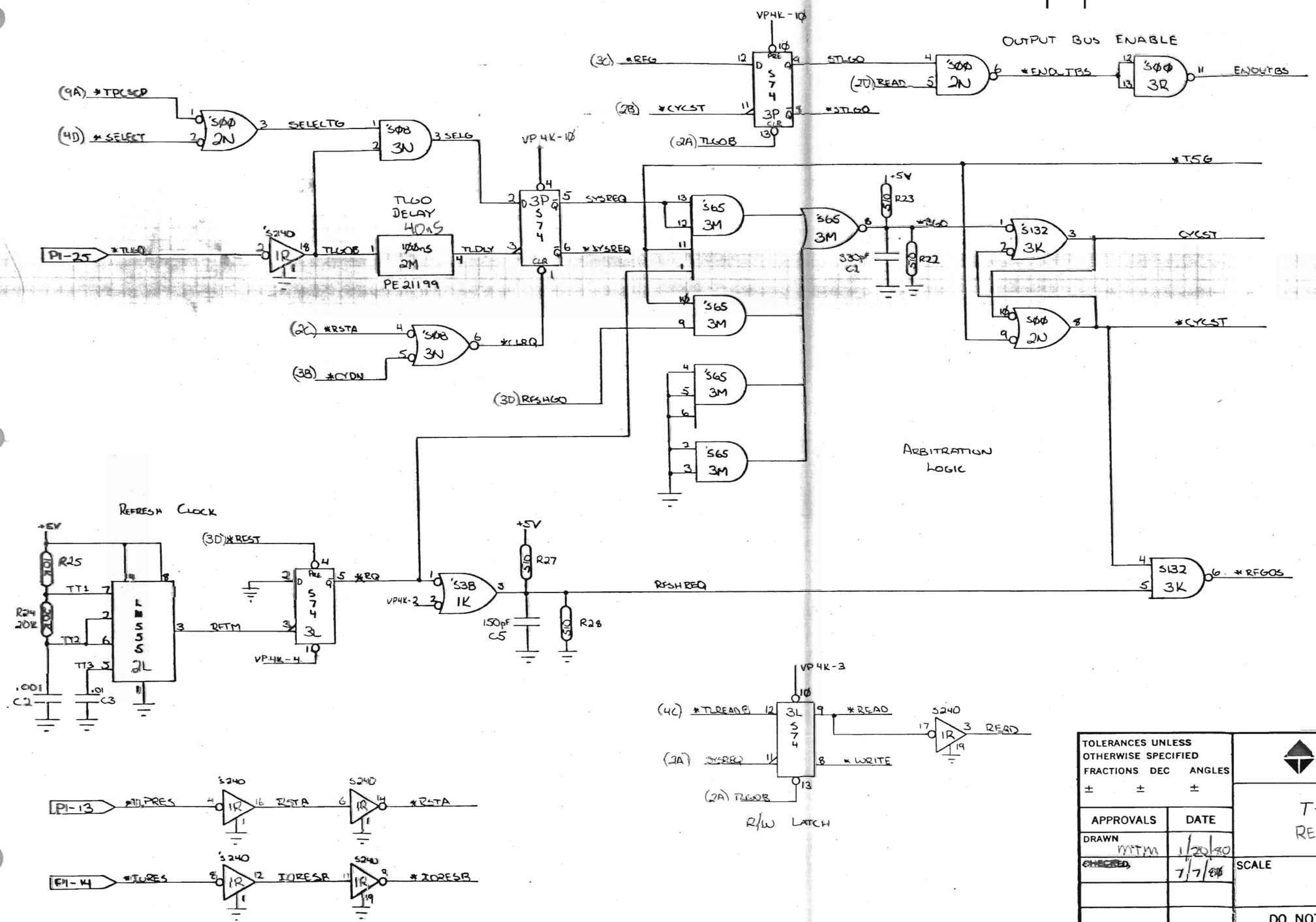

TOLERANCES UNLESS OTHERWISE SPECIFIED
FRACTIONS ± DEC ± ANGLES ±

APPROVALS	DATE
DRAWN MTM	1/20/80
CHECKED	7/7/80

TRIAD Systems Corporation

T-1800 ECC MEMORY
REFRESH ARBITRATION

SCALE	SIZE	DRAWING NO.
	B	L1010715

DO NOT SCALE DRAWING

SHEET 2 OF 11

BISHOP GRAPHICS/ACCUPRESS
REORDER NO. A-8683

REVISIONS			
LTR	DESCRIPTION	DATE	APPROVED

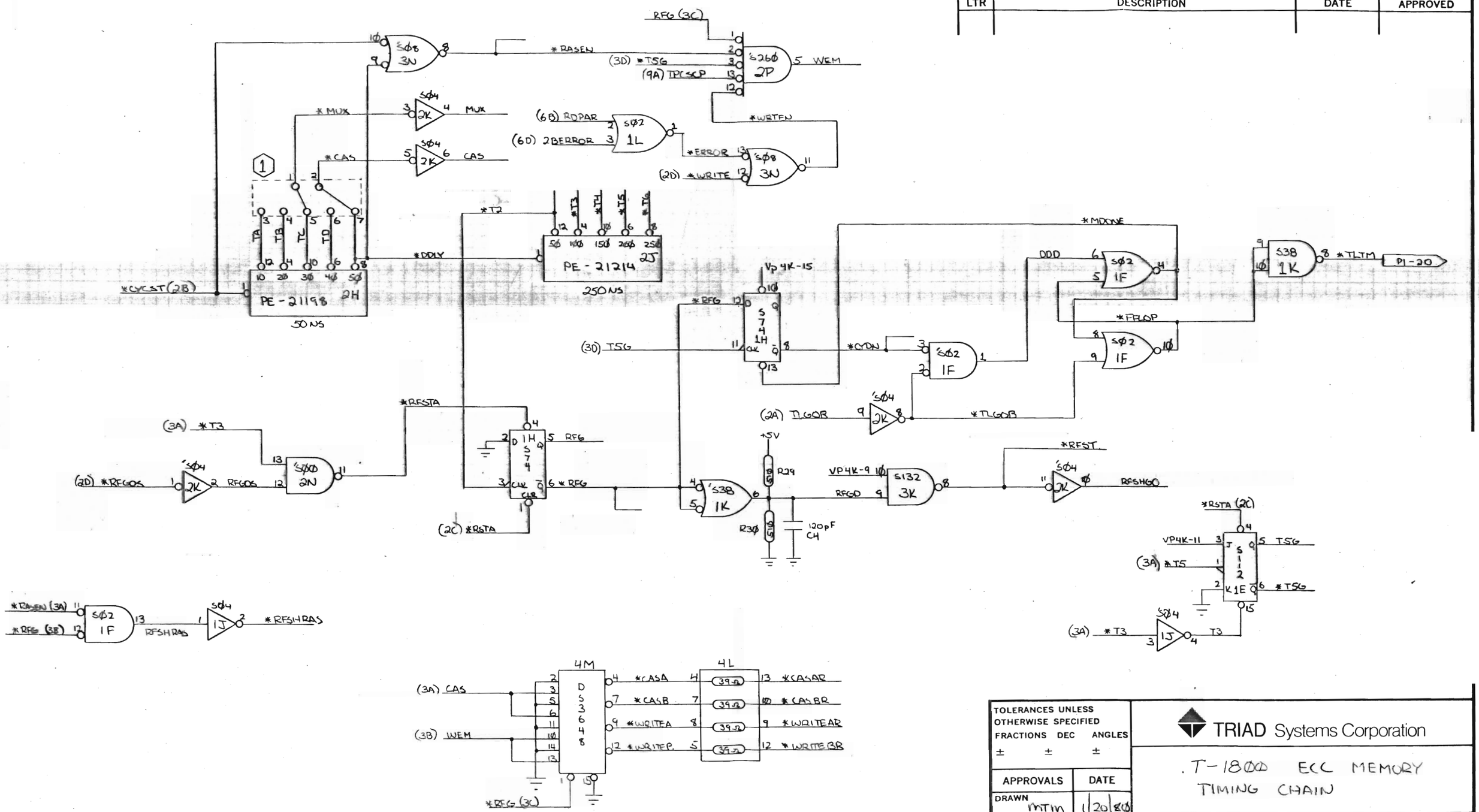

TOLERANCES UNLESS OTHERWISE SPECIFIED		
FRACTIONS ±	DEC ±	ANGLES ±

APPROVALS	DATE
DRAWN MTM	1/20/80
CHECKED	7/7/80

TRIAD Systems Corporation

T-1800 ECC MEMORY TIMING CHAIN

SCALE	SIZE	DRAWING NO.
	B	L1010715

DO NOT SCALE DRAWING

SHEET 3 of 11

BISHOP GRAPHICS/ACCUPRESS
REORDER NO. A-8683

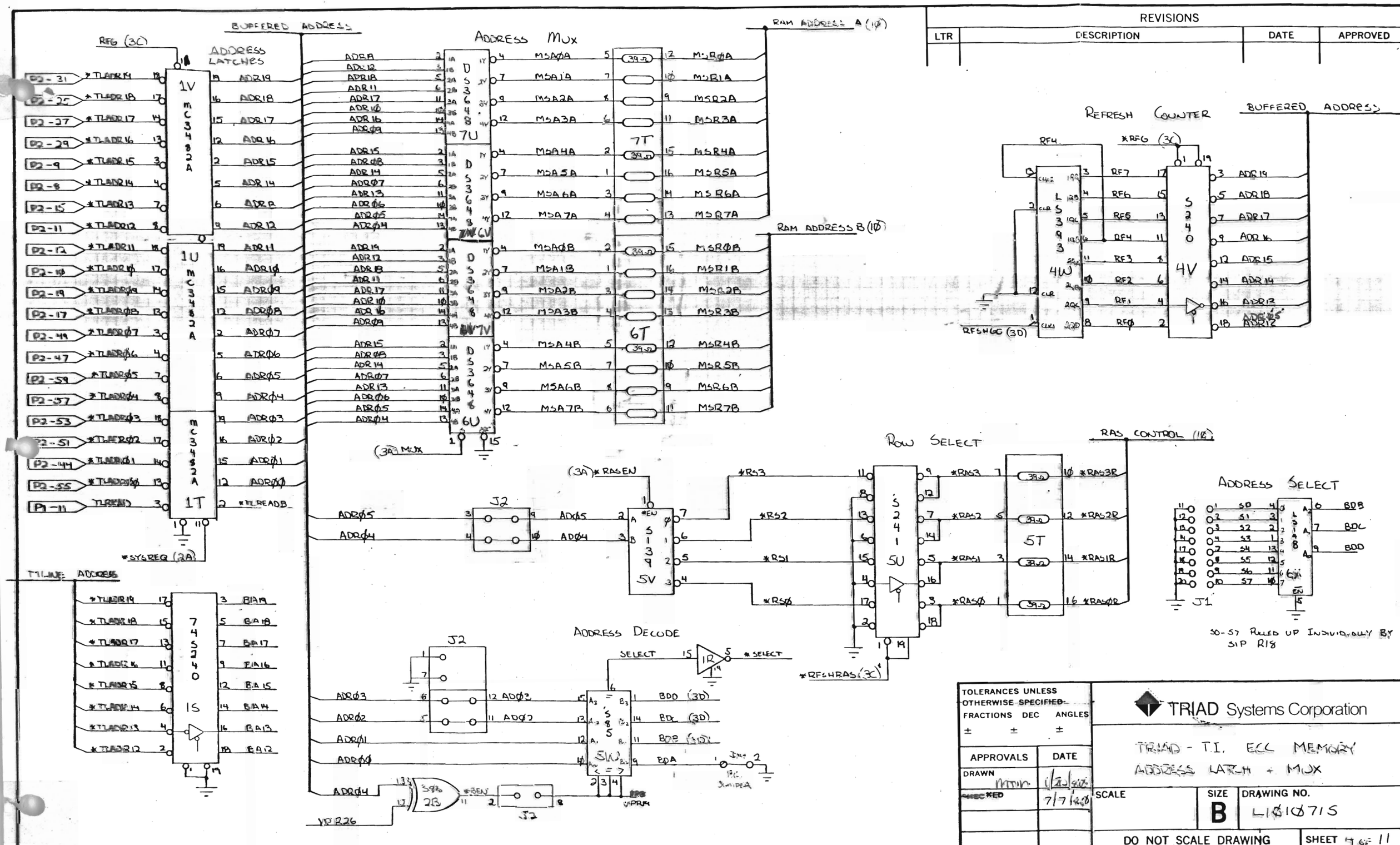

REVISIONS			
LTR	DESCRIPTION	DATE	APPROVED

TOLERANCES UNLESS OTHERWISE SPECIFIED		
FRACTIONS	DEC	ANGLES
±	±	±

APPROVALS	DATE
DRAWN MTM	1/10/80
CHECKED	7/7/80

TRIAD Systems Corporation

TRIAD - T.I. ECC MEMORY
ADDRESS LATCH + MUX

SCALE	SIZE	DRAWING NO.
	B	L1Ø1Ø715

DO NOT SCALE DRAWING

SHEET 4 OF 11

BISHOP GRAPHICS INC. CUPRESS
REORDER NO. A-883

REVISIONS			
LTR	DESCRIPTION	DATE	APPROVED

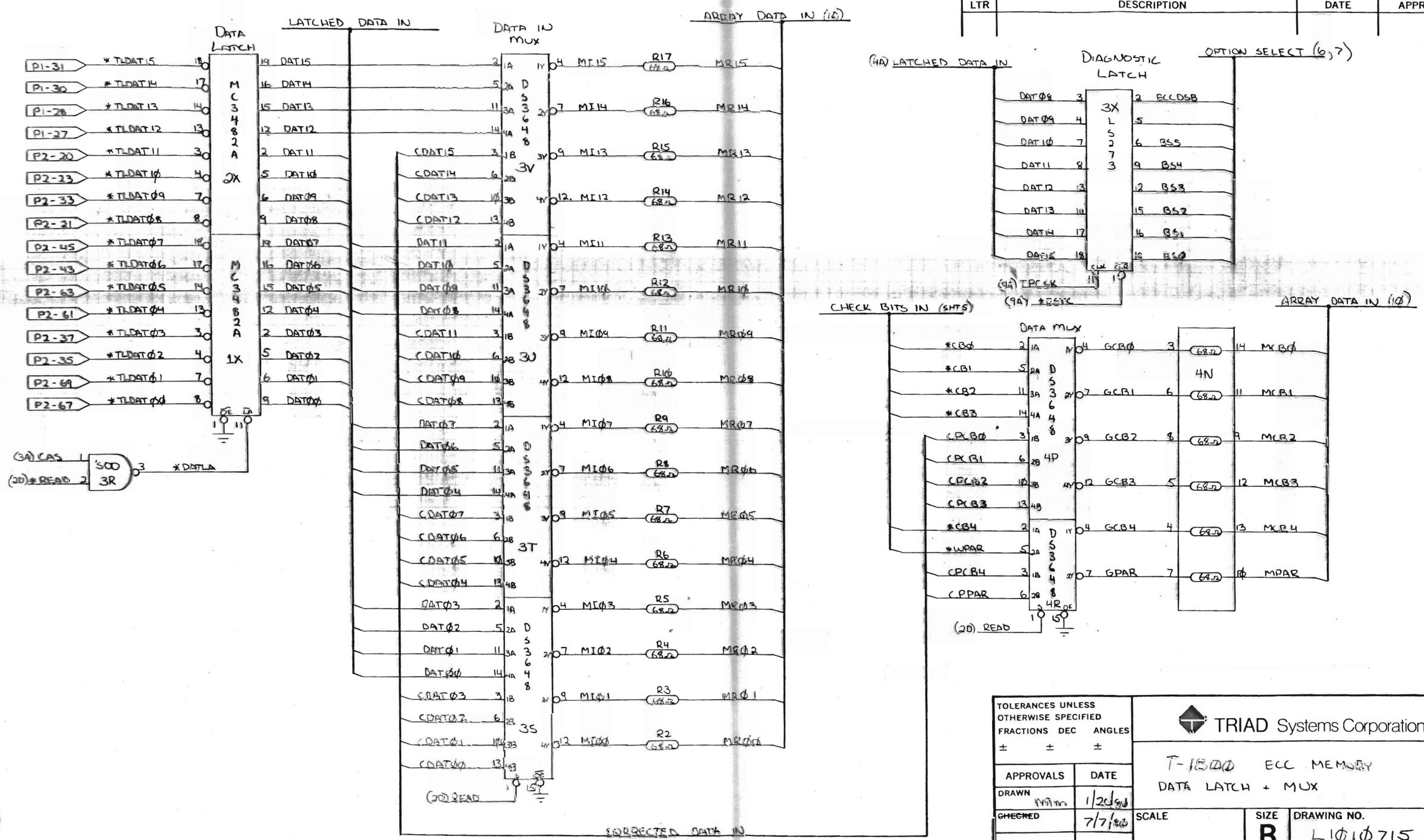

TOLERANCES UNLESS OTHERWISE SPECIFIED		
FRACTIONS ±	DEC ±	ANGLES ±

APPROVALS	DATE
DRAWN	1/20/80
~~CHECKED~~	7/7/80

TRIAD Systems Corporation

T-1800 ECC MEMORY
DATA LATCH + MUX

SCALE	SIZE	DRAWING NO.
	B	L101715

DO NOT SCALE DRAWING

SHEET 5 OF 11

BISHOP GRAPHICS/ACCUPRESS
REORDER NO. A-8683

REVISIONS			
LTR	DESCRIPTION	DATE	APPROVED

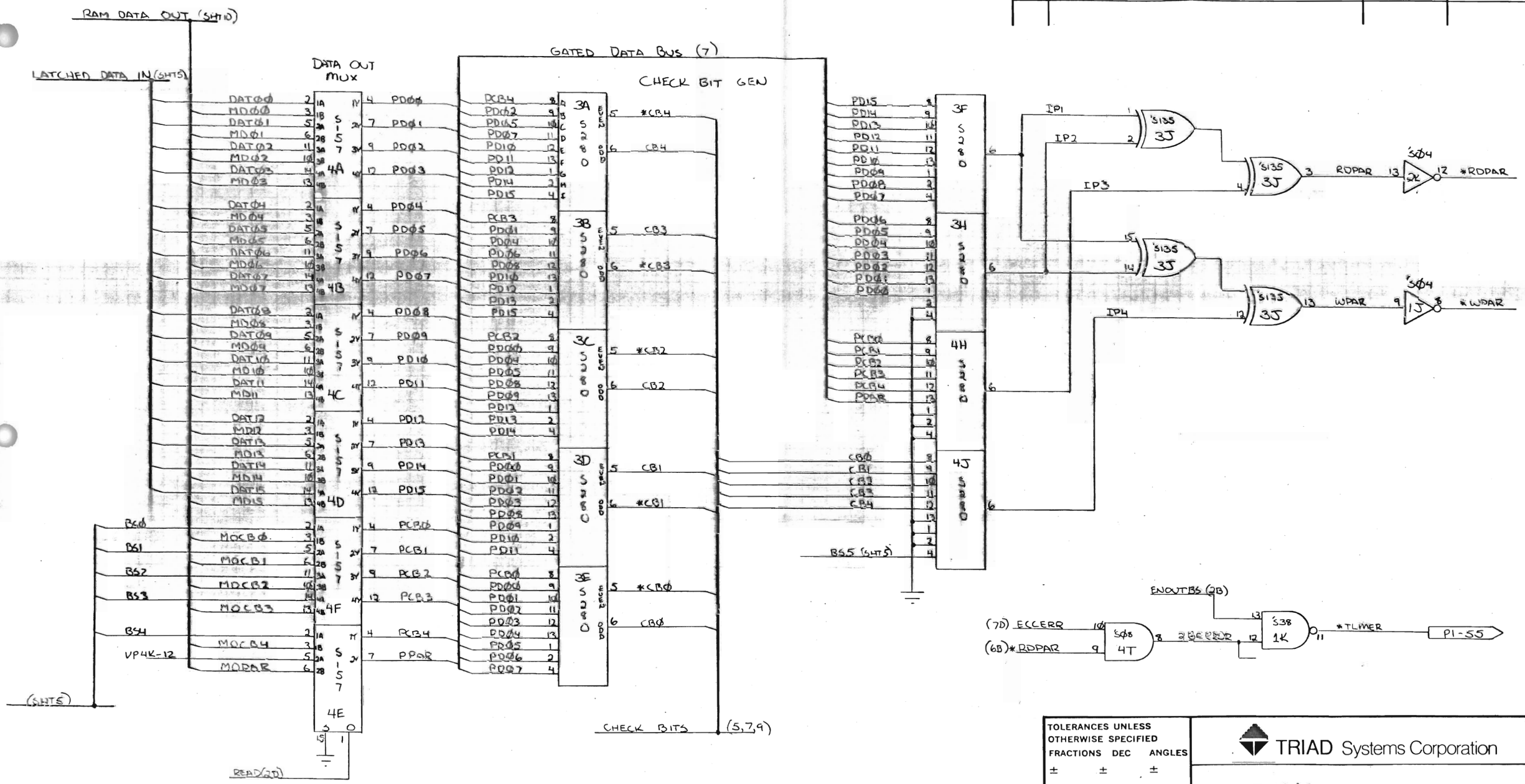

TOLERANCES UNLESS OTHERWISE SPECIFIED		
FRACTIONS	DEC	ANGLES
±	±	±

APPROVALS	DATE
DRAWN MTM	1/19/80
~~CHECKED~~	7/7/80

TRIAD Systems Corporation

T-1800 ECC MEMORY
CHECK BIT GENERATION

SCALE	SIZE	DRAWING NO.
	B	L 1010715

DO NOT SCALE DRAWING

SHEET 6 of 11

BISHOP GRAPHICS/ACCUPRESS
REORDER NO. A-8683

REVISIONS			
LTR	DESCRIPTION	DATE	APPROVED

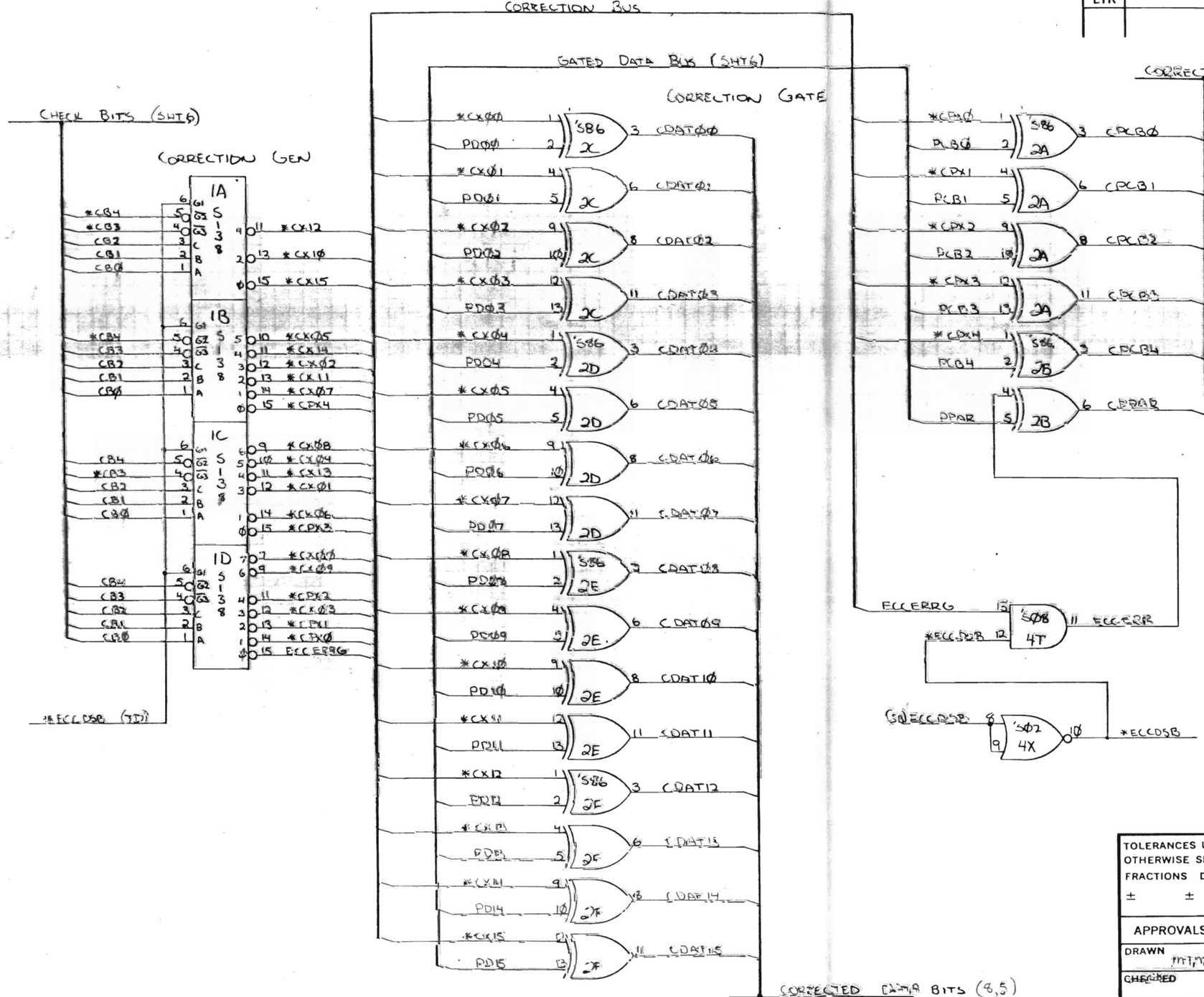

TOLERANCES UNLESS OTHERWISE SPECIFIED		
FRACTIONS	DEC	ANGLES
±	±	±

APPROVALS	DATE
DRAWN MTM	1/19/80
CHECKED	7/7/80

TRIAD Systems Corporation

T-1800 ECC MEMORY CORRECTION CIRCUIT

SCALE	SIZE	DRAWING NO.
	B	L101715

DO NOT SCALE DRAWING

SHEET 7 of 11

BISHOP GRAPHICS/ACCUPRESS
REORDER NO. A-8683

REVISIONS			
LTR	DESCRIPTION	DATE	APPROVED

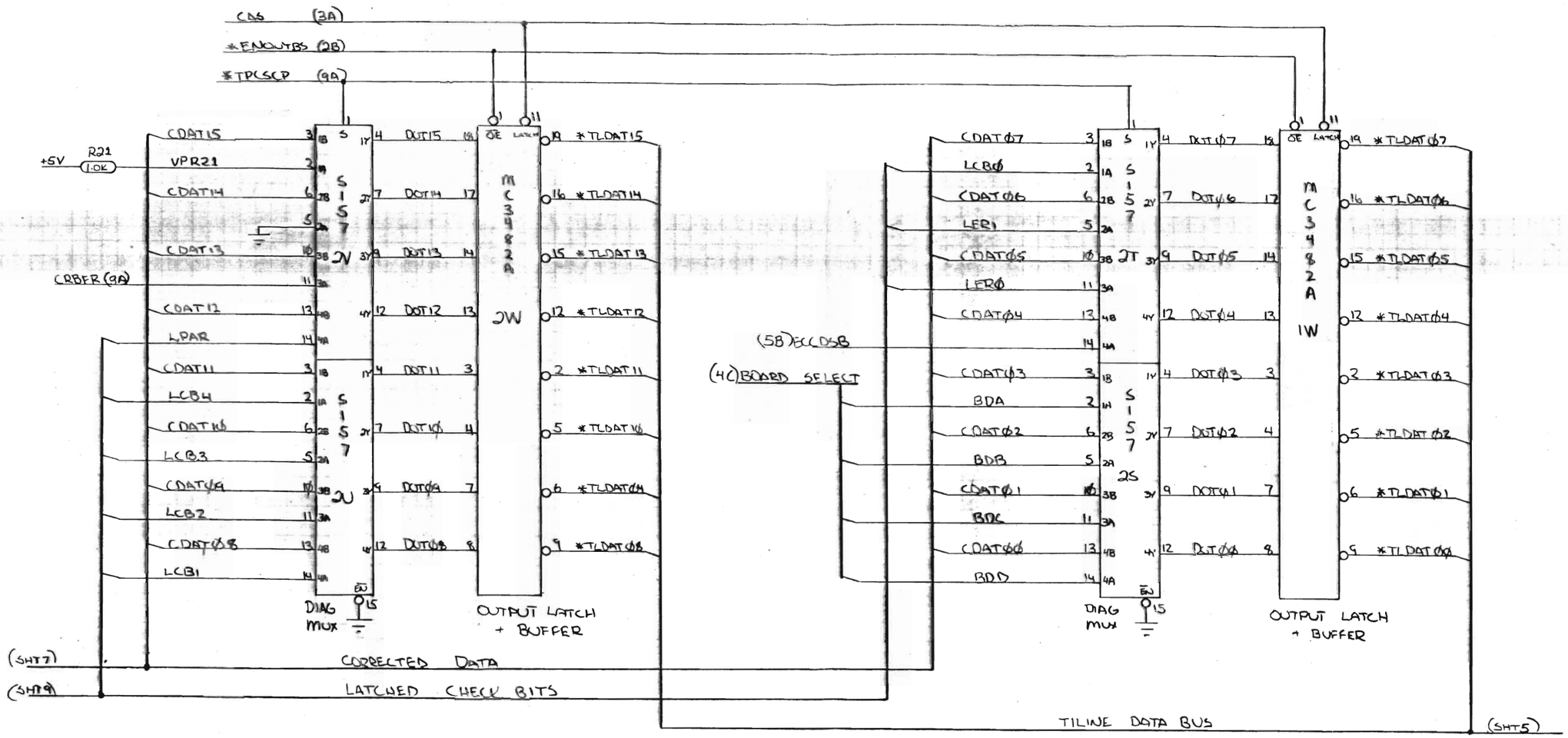

TOLERANCES UNLESS OTHERWISE SPECIFIED		
FRACTIONS ±	DEC ±	ANGLES ±

APPROVALS	DATE
DRAWN MTM	1/21/80
CHECKED	7/7/80

TRIAD Systems Corporation

T-1800 ECC MEMORY
DATA OUT LATCHES + BUFFERS

SCALE	SIZE	DRAWING NO.
	B	L101015

DO NOT SCALE DRAWING

SHEET 8 OF 11

BISHOP GRAPHICS/ACCUPRESS
REORDER NO. A-8683

REVISIONS			
LTR	DESCRIPTION	DATE	APPROVED

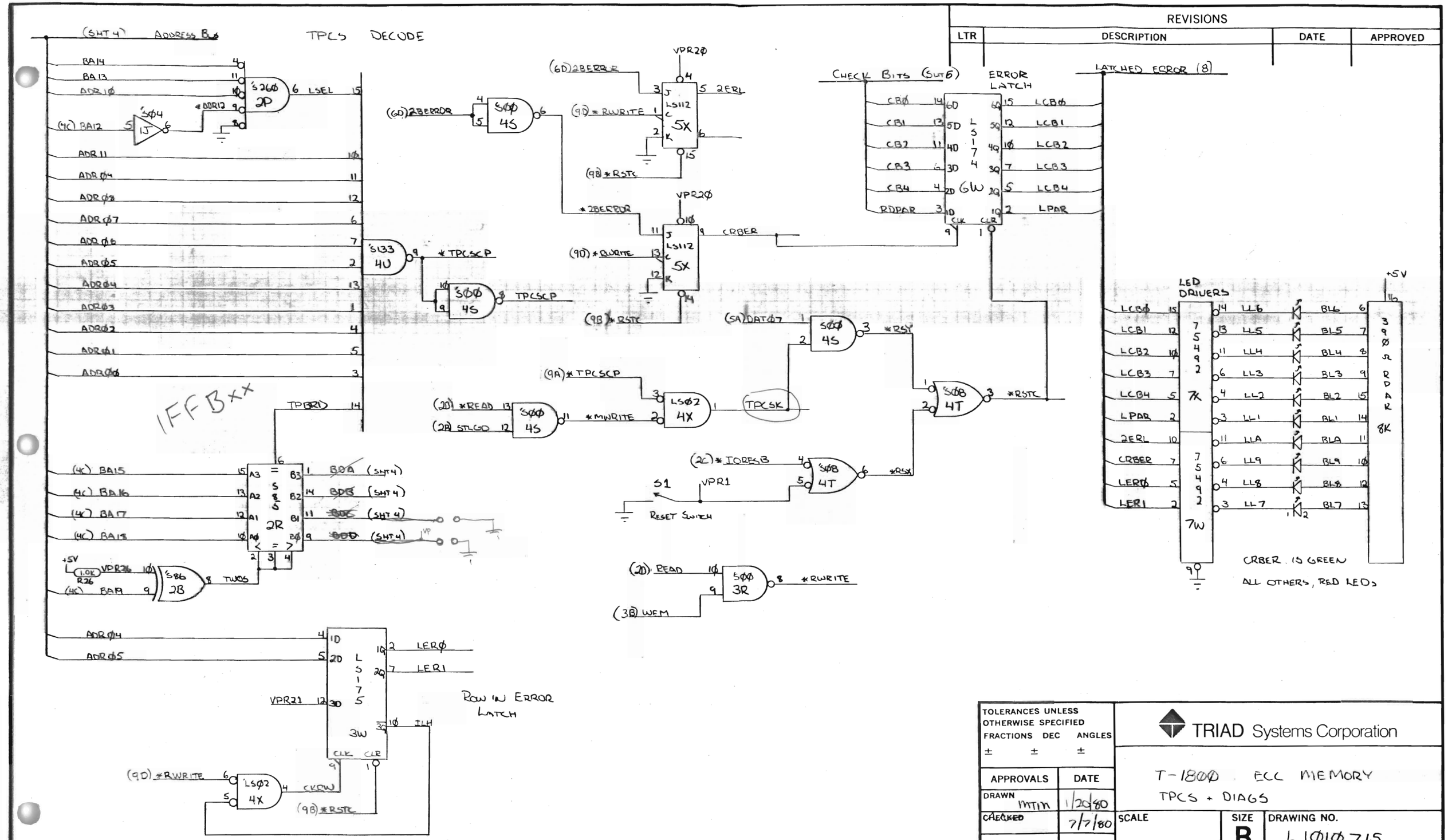

TOLERANCES UNLESS OTHERWISE SPECIFIED		
FRACTIONS	DEC	ANGLES
±	±	±

APPROVALS	DATE
DRAWN MTM	1/20/80
CHECKED	7/7/80

TRIAD Systems Corporation

T-1800 ECC MEMORY
TPCS + DIAGS

SCALE	SIZE	DRAWING NO.
	B	L1010715

DO NOT SCALE DRAWING

SHEET 9 OF 11

BISHOP GRAPHICS/ACCUPRESS
REORDER NO. A-8683

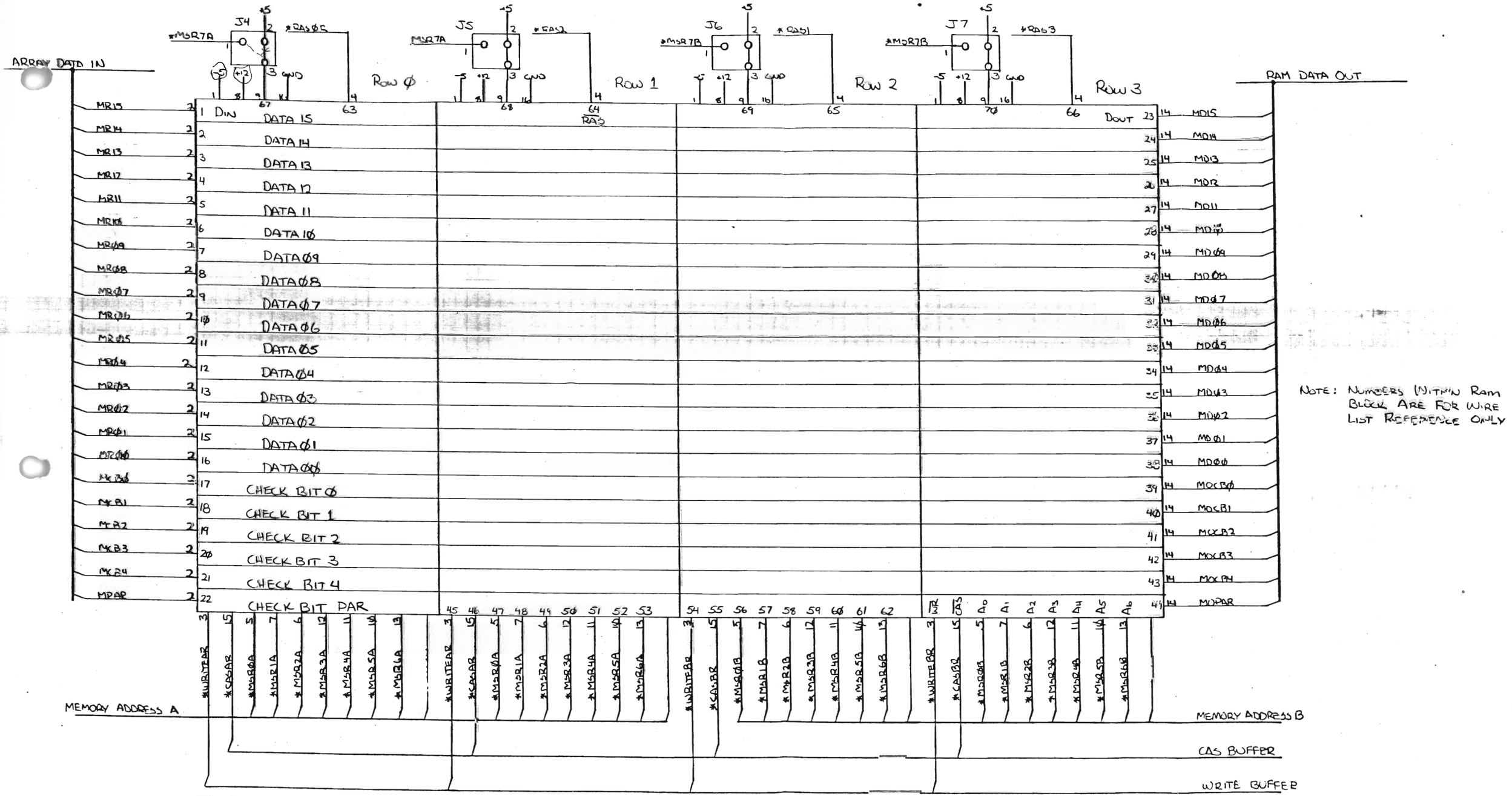

NOTE: NUMBERS WITHIN RAM BLOCK ARE FOR WIRE LIST REFERENCE ONLY

T-1800
128K ECM RAM ARRAY

KMM 7/7/89

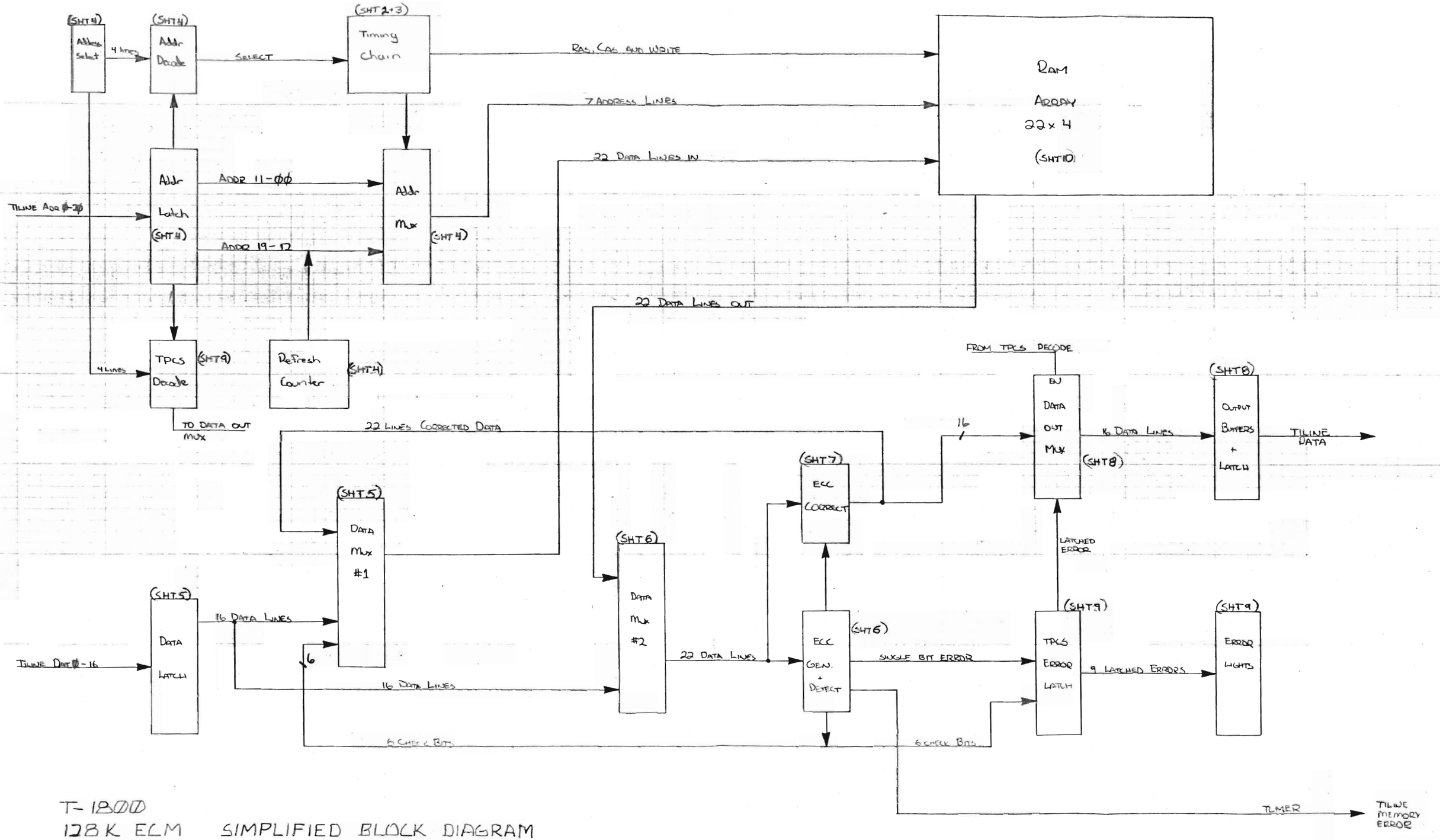

T-1800
128K ECM SIMPLIFIED BLOCK DIAGRAM

MTM 7/7/80

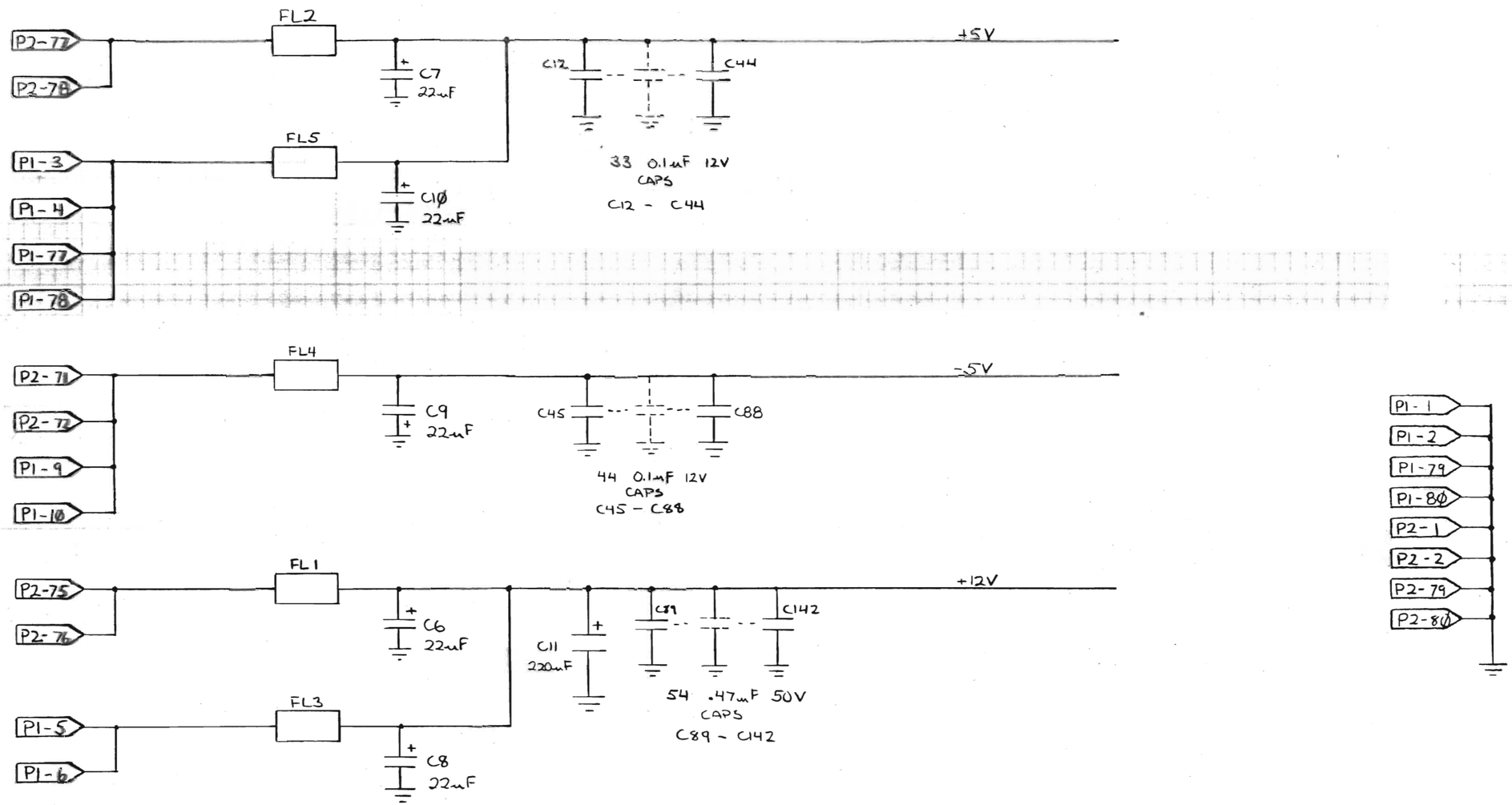

128K ECM SUPPLY LINES

DRAWN mtm	SIZE B	FSCM NO.	DWG. NO. L1010715	REV.
ISSUED	SCALE		SHEET 12 of 12	

BISHOP GRAPHICS/ACCUPRESS
REORDER NO. A-7527