REVISIONS				
SYM.	ZONE	DESCRIPTION	DATE	APPROVED

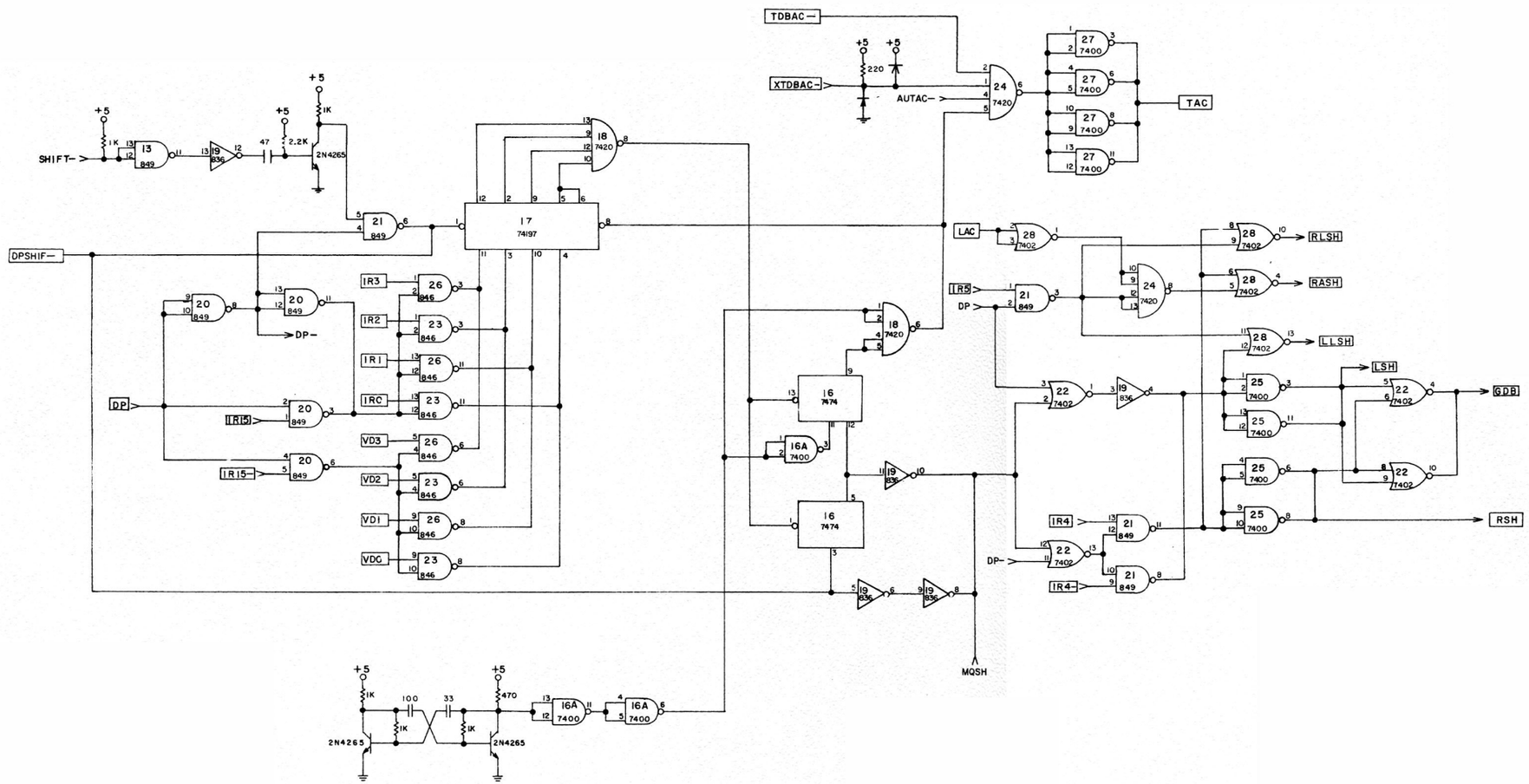

UNLESS OTHERWISE SPECIFIED DIMENSIONS ARE IN INCHES AND TOLERANCES ARE FRACTIONS DECIMALS ANGLES ± ± ± √ INDICATES SURFACE ROUGHNESS PER MIL-STD-10	REMOVE ALL BURRS BREAK ALL SHARP CORNERS	NICOLET INSTRUMENT CORPORATION 5225 Verona Road, Madison, Wisconsin 53711
MATERIAL	DRAWN / DATE	TITLE AUTO ARITHMETIC & CONTROL BOARD SHIFT CONTROL 1080
SPEC.	CHECKED	
FINISH	APPROVED	
SPEC.	APPROVED	CODE IDENT. NO. / SIZE D / (BOARD 3)
NEXT ASS'Y / USED ON		SCALE / SHEET 2 of 4
APPLICATION		

REV.

DIST. KEY

Rev. A 6/15/71