REVISIONS				
SYM.	ZONE	DESCRIPTION	DATE	APPROVED

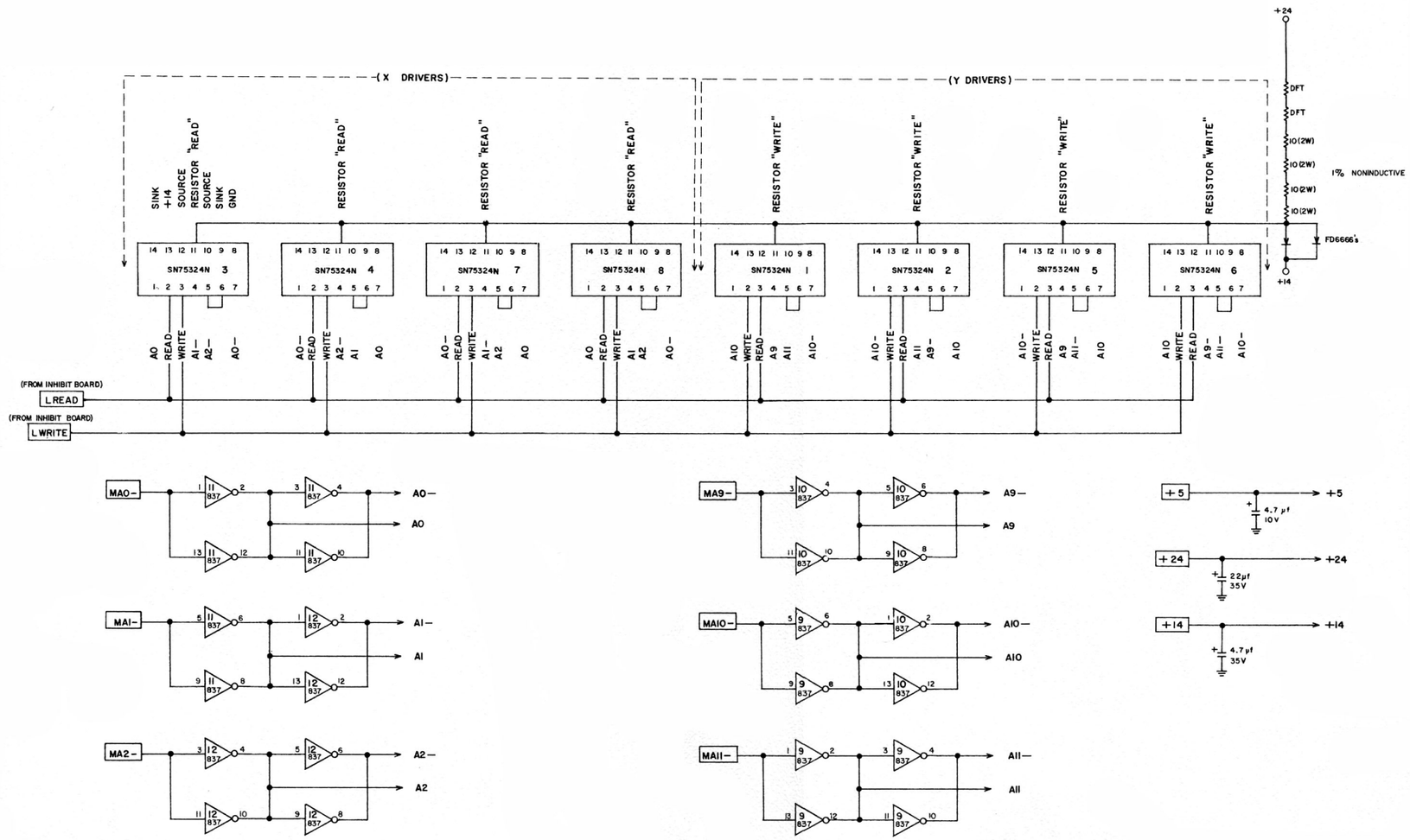

NEXT ASS'Y	USED ON
APPLICATION	

UNLESS OTHERWISE SPECIFIED DIMENSIONS ARE IN INCHES AND TOLERANCES ARE FRACTIONS ± DECIMALS ± ANGLES ±
√ INDICATES SURFACE ROUGHNESS PER MIL-STD-10

MATERIAL
SPEC.
FINISH
SPEC.

REMOVE ALL BURRS
BREAK ALL SHARP CORNERS

		DATE
DRAWN		
CHECKED		
APPROVED		
APPROVED		

NICOLET INSTRUMENT CORPORATION
5225 Verona Road, Madison, Wisconsin 53711

TITLE
ADDRESS DRIVER FOR MODEL 1080

CODE IDENT. NO.	SIZE	
	D	MEMORY BOARD 3
SCALE		SHEET 2 of 2

REV.

DIST. KEY