REVISIONS				
SYM.	ZONE	DESCRIPTION	DATE	APPROVED

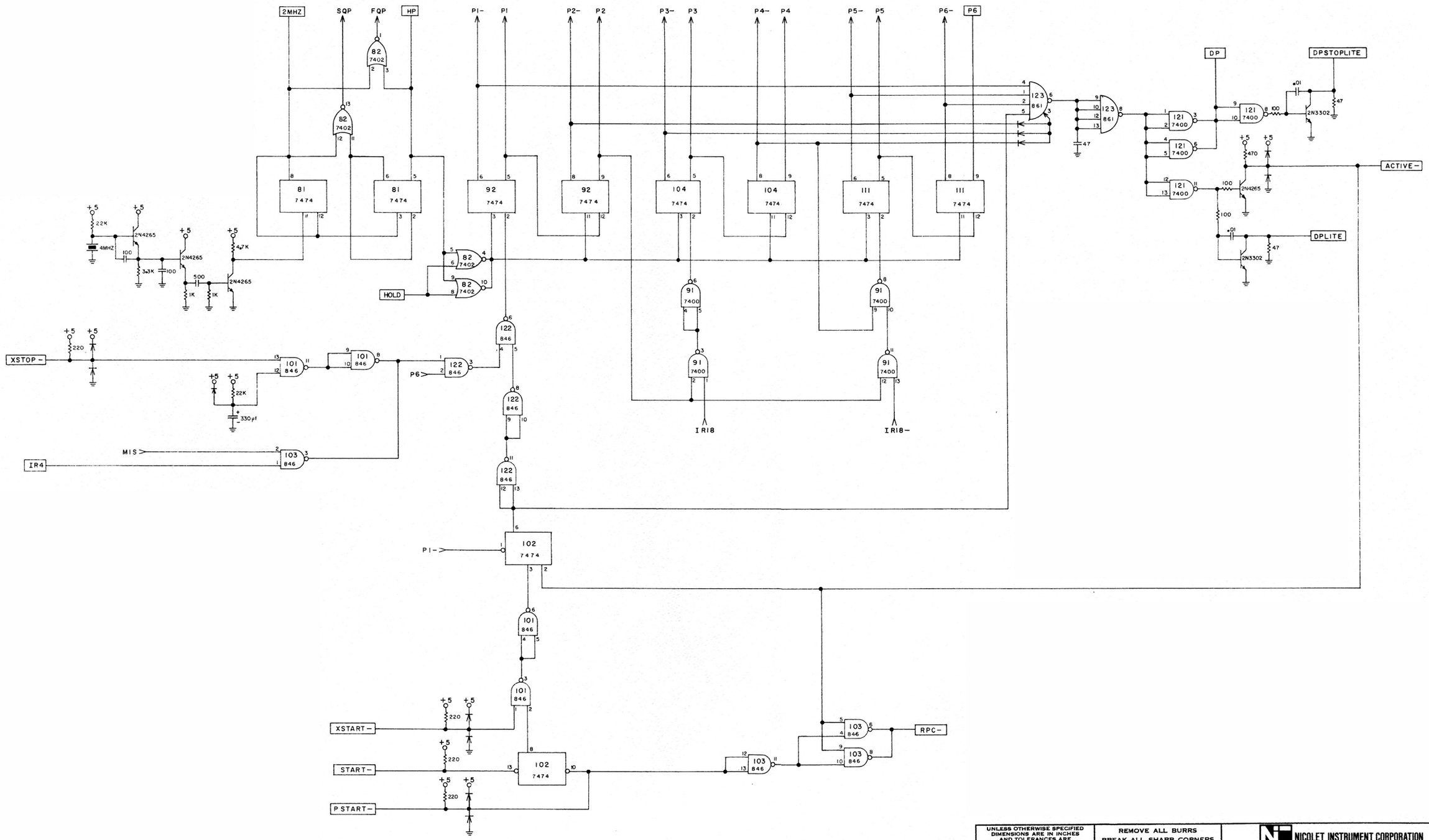

UNLESS OTHERWISE SPECIFIED DIMENSIONS ARE IN INCHES AND TOLERANCES ARE FRACTIONS ± DECIMALS ± ANGLES ±	REMOVE ALL BURRS BREAK ALL SHARP CORNERS	NICOLET INSTRUMENT CORPORATION 5225 Verona Road, Madison, Wisconsin 53711
√ INDICATES SURFACE ROUGHNESS PER MIL-STD-10	DRAWN GW DATE	TITLE DATA PROCESSOR CONTROL BOARD (PROGRAM PULSER) 1080
MATERIAL SPEC.	CHECKED / APPROVED / APPROVED	
FINISH SPEC.		CODE IDENT. NO. / SIZE D / (BOARD 4)
NEXT ASS'Y / USED ON / APPLICATION		SCALE / SHEET 3 of 3

REV. DIST. KEY